355

Parts Manual

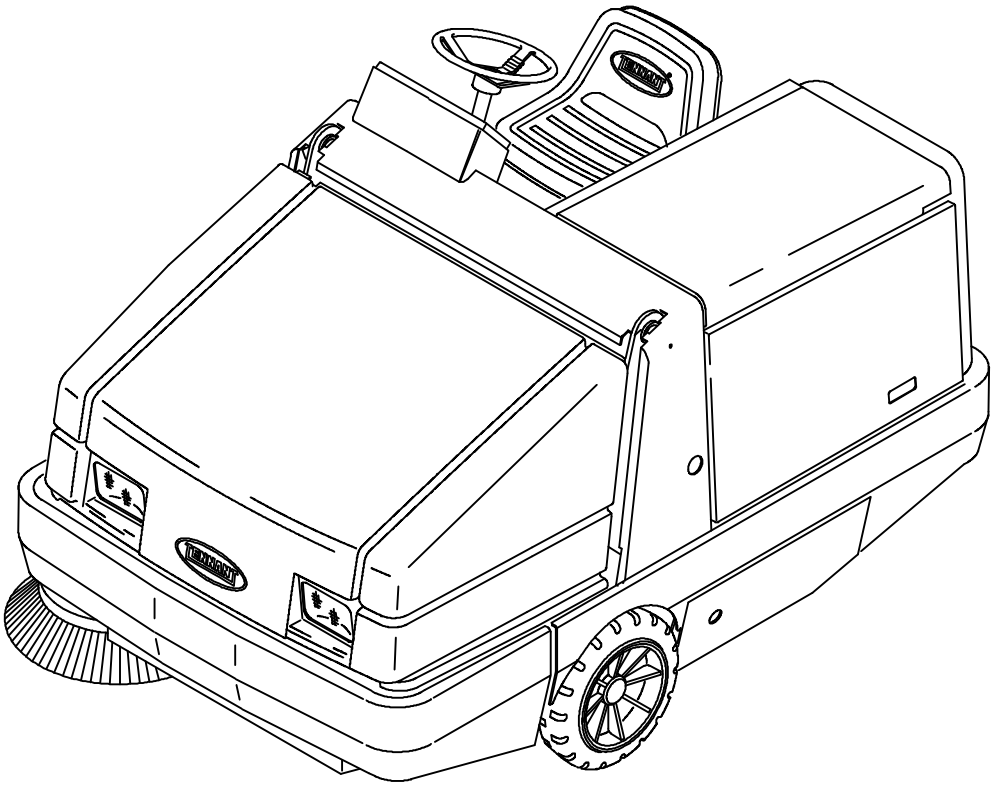

MM300

This manual is furnished with each new TENNANT Model 355.

This manual consists of the How To Use This Manual; Standard Parts; Options; Breakdowns; Engine Breakdown; and Cross Reference sections.

MACHINE DATA

Please fill out at time of installation for future reference.

Machine Model Number – 355

Machine Serial Number – _____

Machine Options – _____

TENNANT Representative/phone no. – _____

Customer ID Number – _____

Date of Installation – _____

Manual Number – MM300

Revision: 08

Published: 3–97

Copyright © 1992, 1993, 1994, 1995, 1996, 1997 TENNANT, Printed in U.S.A.

HOW TO USE THIS MANUAL

This section on *HOW TO USE THIS MANUAL* will tell you how to:

- Find important machine information for ordering correct repair parts.
- Find TENNANT part numbers.
- Order TENNANT parts and supplies.

IMPORTANT INFORMATION

When placing an order for parts, the machine model and machine serial number are important. Refer to the *MACHINE DATA* box which is filled out during the installation of your machine. The *MACHINE DATA* box is located on the inside of the front cover of this manual.

MACHINE DATA

Please fill out at time of installation for future reference.

Machine Model Number – 355

Machine Serial Number – _____

Machine Options – _____

TENNANT Representative/phone no. – _____

Customer ID Number – _____

Date of Installation – _____

Manual Number – MM300

Revision: 00

Published: 08-92

The model number of your machine is on the side of the machine.

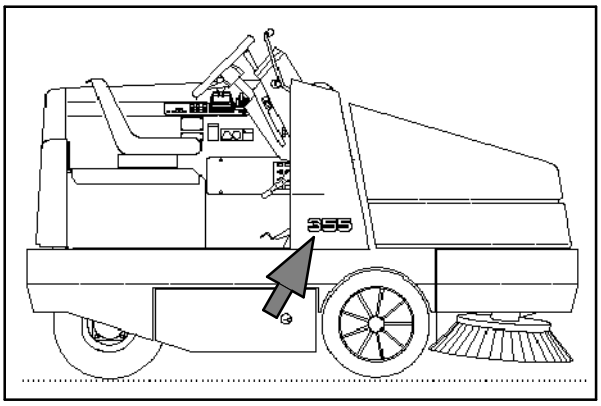

The serial number of your machine is printed on the machine data plate located as shown.

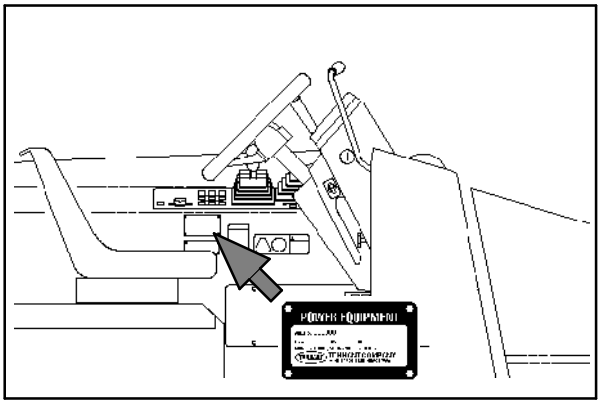

FINDING A TENNANT PART NUMBER

This manual contains the following sections:

- HOW TO USE THIS MANUAL
- STANDARD PARTS
- OPTIONS
- BREAKDOWNS
- CROSS REFERENCE

The STANDARD PARTS section lists repair parts for standard machines. They are grouped in this general order:

- General wear parts.
- Machine frame and related parts.
- Machine propelling system.
- Scrubbing components.
- Electrical parts.

The OPTION section lists repair parts of options.

The BREAKDOWN section lists available repair parts of major components.

All sections in this manual consist of parts illustrations and corresponding parts lists.

The parts illustrations are numbered with ***Ref*** numbers which refer to corresponding parts lists.

The parts lists include a number of columns of information:

- ***Ref*** – column refers to the reference number on the parts illustration.
  ∇ – indicates the part is an assembly.
  ▲ – indicates the part is included in the assembly listed just before it.

- ***TENNANT Part No.*** – column lists the TENNANT part number for the part.

- ***Serial Number*** – column indicates the set of machines the part number is applicable to. Serial numbers change when the machine design has been modified. The most current design of the machine is shown in the main illustration, older designs are boxed in a corner of the illustration.

- ***Description*** – column is a brief description of the part.

- ***Qty.*** – column lists the quantity of that part used in that area of the machine.

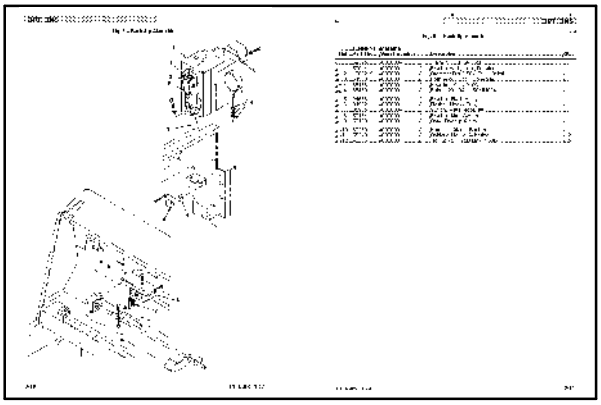

Ref.	TENNANT Part No.	Machine Serial number	Description	Qty.
∇	59395	(000000-	Alarm Kit, Bu A/K 35R	1
▲ 1	50344	(000000	Bracket V-Mt, Light, Rotating	1
▲ 2	10032-9	(000000-	Grommet,Rtr,0.20Id,For .10Matl	1
▲ 3	61920	(000000-	Horn Assy, Back-Up Alarm	1
▲∇ 4	36438	(000000-	Headlight Assy,21CG	1
▲▲ 4	36439	(000000-	Bulb, 12V .9A 15Cd#1004	1
▲ 5	24576-1	(000000-	Bracket, Flasher	1
▲ 6	31922	(000000-	Flasher, Heavy Duty	1
▲ 7	35JU6	(000000-	Switch, Waterproof, 10A	1
▲ 8	59154	(000000-	Bracket, Mtg, Switch	1
▲ 9	59163	(000000-	Cam, Backup Alarm	1
▲ 10	60269	(000000-	Harness, Alarm, Backup	1
▲ 11	55246	(000000-	Cadette Mount, Adhesive	2
▲ 12	49266	(000000-	Tie, Cable .75D Max 7.50Lg	5

NOTE: If a service kit is installed on your machine, be sure to keep the INSTRUCTION BULLETIN which came with the kit. It contains repair parts numbers needed for ordering future parts.

NOTE: Fasteners used in this machine may be metric or non-metric. Take care when replacing hardware to replace with same thread size.

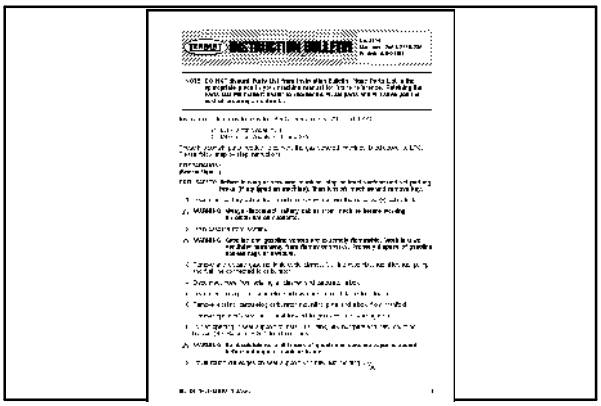

PLACING AN ORDER

Orders may be placed by phone, fax, or by mail. Phone orders may need written confirmation. Follow the steps below to insure prompt delivery:

1. Identify the model number of your machine.
2. Identify the serial number of your machine.
3. Find the part number of the part you need. Do not order by page number or reference number. If you are not able to find the part number, call your TENNANT representative for help or send the old part as a sample.
4. Determine the quantity of the part you need.
5. Provide the following company information:
   - Company name
   - Customer ID Number
   - Shipping address
   - Billing address
   - First and last name of person ordering parts
   - Telephone number
   - Purchase order number
6. Provide definitive shipping instructions.

Any claim for loss or damage to a shipment in transit should be filed promptly with the transportation company making the delivery. Shipments will be complete unless the packing list or order acknowledgement indicates items back ordered.

If parts received are suspected to be incorrect or defective, please contact the TENNANT representative from whom you ordered the part. They will give authorization for return and/or handle replacement shipments when required.

SECTION 2

CONTENTS **PAGE**

Fig. 1 – General Recommended Maintenance Items 2-3
Fig. 2 – Replacement Brushes 2-4
Fig. 3 – Main Frame Group 2-6
Fig. 4 – Right Brush Door Group 2-8
Fig. 5 – Left Brush Door Group 2-9
Fig. 6 – Seat and Shroud Group 2-10
Fig. 7 – Right Grille Group 2-12
Fig. 8 – Left Grille and Hydraulic Cooler Group 2-14
Fig. 9 – Engine Cover Group 2-16
Fig. 10 – Engine Side Door Group 2-18
Fig. 11 – Steering and Firewall Group 2-20
Fig. 12 – Instrument Panel Assembly 2-22
Fig. 13 – Side Instrument Panel Group 2-24
Fig. 14 – Circuit Breaker and Relay Group 2-25
Fig. 15 – Engine Group 2-26
Fig. 16 – Engine Mount Group 2-28
Fig. 17 – Carburetor Group, Gasoline 2-30
Fig. 18 – Carburetor Group, LPG 2-32
Fig. 19 – Vaporizer Group, LPG 2-34
Fig. 20 – Air Cleaner Group 2-36
Fig. 21 – Alternator and Engine Fan Group 2-38
Fig. 22 – Muffler Group 2-39
Fig. 23 – Fuel Tank Group, Gasoline 2-40
Fig. 24 – Fuel Tank Group, Gasoline 2-42
Fig. 25 – Fuel Tank Group, LPG 2-44
Fig. 26 – Radiator Group 2-46
Fig. 27 – Battery Group, Gasoline 2-48
Fig. 28 – Battery Group, LPG 2-49
Fig. 29 – Rear Drive Wheel Group 2-50
Fig. 30 – Rear Wheel Assembly 2-52
Fig. 31 – Front Wheel and Brakes Group 2-54
Fig. 32 – Brake Lever and Pedal Group 2-56
Fig. 33 – Directional Pedal Group 2-58
Fig. 34 – Hydraulic Pump Linkage Group 2-60
Fig. 35 – Hopper and Dump Door Group 2-62
Fig. 36 – Hopper Cylinder and Dust Door Group 2-64
Fig. 37 – Hopper Hood and Bumper Group 2-66
Fig. 38 – Hopper Hood and Bumper Group 2-68
Fig. 39 – Filter Box Group 2-70
Fig. 40 – Hopper Lift Arms Group 2-72
Fig. 41 – Side Brush Motor and Pivot Group 2-74
Fig. 42 – Side Brush Lift Group 2-76
Fig. 43 – Main Brush Lift Group 2-78
Fig. 44 – Main Brush Drive Group 2-80
Fig. 45 – Vacuum Fan Group 2-82
Fig. 46 – Vacuum Fan Motor and Fittings Group 2-84
Fig. 47 – Hydraulic Schematic 2-85
Fig. 48 – Hydraulic Hose Group 2-86
Fig. 49 – Hydraulic Hose Group 2-88
Fig. 50 – Hydraulic Reservoir Group 2-90
Fig. 51 – Hydraulic Valve Group 2-92
Fig. 52 – Hydraulic Valve Group 2-94

Continued

CONTENTS

Fig. 53 – Hydraulic Pumps Group 2-96
Fig. 54 – Pressure Switch Group 2-97
Fig. 55 – Electrical Schematic 2-99
Fig. 56 – Wire Harnesses Group 2-100
Fig. 57 – Label Group 2-104

07927

Fig. 1 - General Recommended Maintenance Items

	Ref.	Tennant Part No.	Machine Serial Number	Description	Qty.
∇		69941	(000000-)	Performance Pkg 400Hr Gas 355L	1
▲		39046	(000000-)	Spark Plug	4
▲		~~07705~~	~~(000000-)~~	~~Gasket~~	~~1~~
▲		58120	(000000-)	Element, Air Filter	1
▲		19205	(000000-)	Filter, Eng Oil, Spin-On	~~8~~ 1
▲		36050	(000000-)	Filter, Fuel	~~2~~ 1
▲		~~05869-1~~	~~(000000-)~~	~~Fluid, Hyd Oil, Shp 15/40 1Gal~~	~~6~~
▲		55740	(000000-)	Filter Element Ph	1
∇		69942	(000000-)	Performance Pkg 400Hr LPG 355L	1
▲		39046	(000000-)	Spark Plug	4
▲		~~07705~~	~~(000000-)~~	~~Gasket~~	~~1~~
▲		58120	(000000-)	Element, Air Filter	1
▲		19205	(000000-)	Filter, Eng Oil, Spin-On	~~8~~ 1
▲		~~05869-1~~	~~(000000-)~~	~~Fluid, Hyd Oil, Shp 15/40 1Gal~~	~~6~~
▲		55740	(000000-)	Filter Element Ph	1
∇		72066	(000000-)	Maint,Kit, Shaker Filter, 355L	1
▲		79425	(000000-)	Seal, Bulb 140.0 Lg	1
▲		36663	(000000-)	Sleeve,1.12B 1.38D1.00 Rubber	2
▲		36665	(000000-)	Sleeve,1.12B 1.62D1.50 Rubber	2
▲		36661	(000000-)	Bar-Flt .06T 1.00W 4.00L,Rbr	2
▲		36658	(000000-)	Bar-Flt .06T 4.00W 5.00L,Rbr	1
∇		72067	(000000-)	Maint Kit, Skirts 355L	1
▲		59687	(000000-)	Seal, Door, Dump, Side	2
▲		59688	(000000-)	Strap, Door, Dump, Side	2
▲		09007	(000000-)	Scr Hexssm 6X1.0 25	8
▲		01684	(000000-)	Washer Flt .25 Ss	16
▲		08712	(000000-)	Nut-Hxlocnyln M 6X1.0 Reg Ss	8
▲		55864	(000000-)	Cord, Sponge	1
▲		59685	(000000-)	Seal, Door, Dump	1
▲		59686	(000000-)	Strap, Door, Dump	1
▲		09007	(000000-)	Scr Hexssm 6X1.0 25	6
▲		01684	(000000-)	Washer Flt .25 Ss	12
▲		08712	(000000-)	Nut-Hxlocnyln M 6X1.0 Reg Ss	6
∇		72068	(000000-)	Maint Kit, Seals 355L	1
▲		59680	(000000-)	Skirt, Lip	1
▲		59681	(000000-)	Skirt, Lip	1
▲		55890	(000000-)	Strap, Main Lip	1
▲		09010	(000000-)	Scr Hexssm 8X1.25 25	5
▲		01685	(000000-)	Washer Flt .31 Ss	5
▲		08713	(000000-)	Nut-Hxlocnyln M 8X1.25 Reg Ss	5
▲		54089	(000000-)	Skirt, Side, Sbdc, Lh	1
▲		54013	(000000-)	Plate, Retainer, Lh	1
▲		54014	(000000-)	Plate, Retainer, Front, Lh	1
▲		12459	(000000-)	Scr-Hxfmgm 6X1.0 20 Pltd	6
▲		01684	(000000-)	Washer Flt .25 Ss	6

Fig. 2 - Replacement Brushes

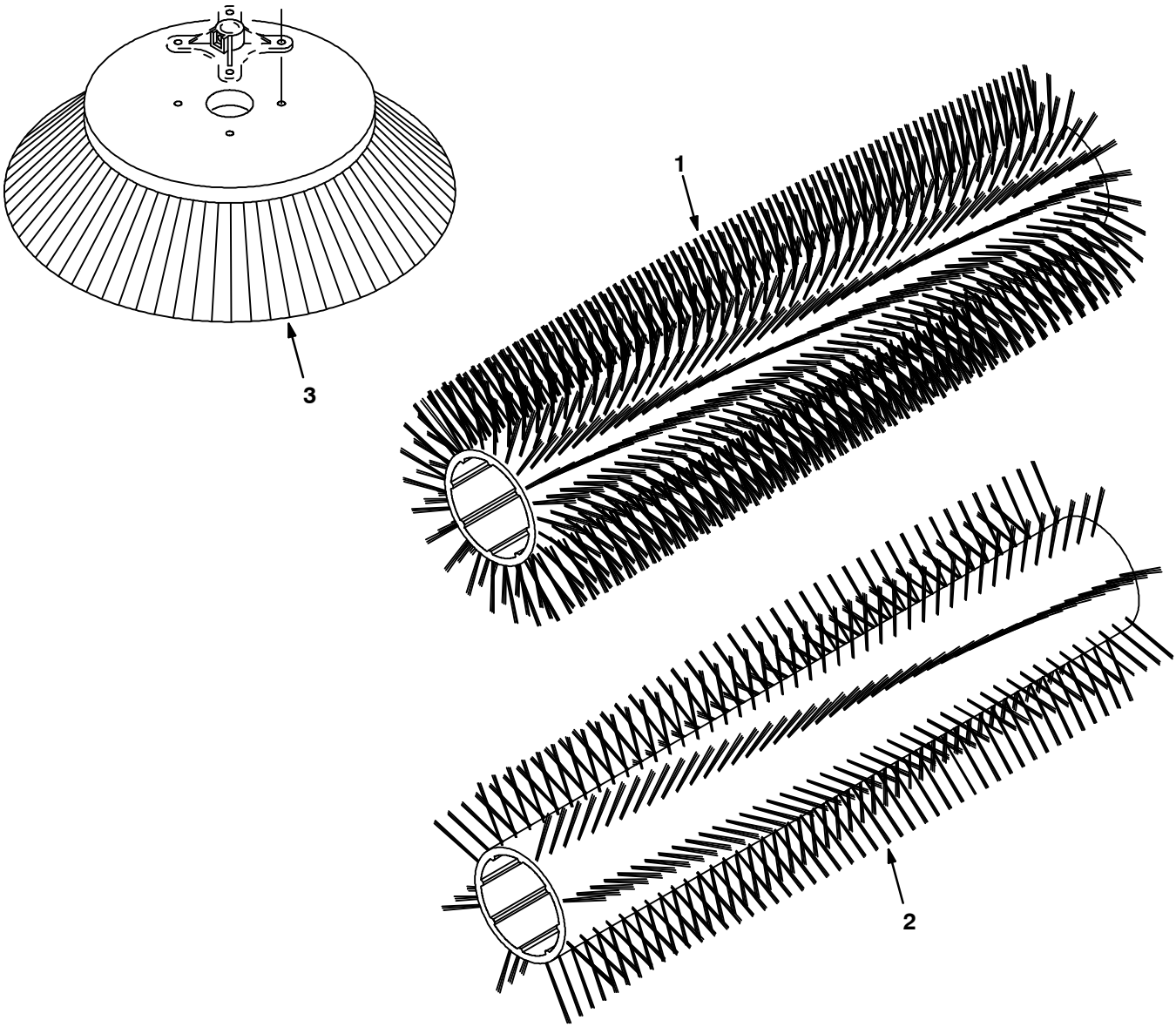

07929/07513

Fig. 2 - Replacement Brushes

Ref.	Tennant Part No.	Machine Serial Number	Description	Qty.
1	54927	(000000-)	Brush-Sweep Spl-45Lg-24 Single Row-Fiber and Wire	1
1	54922	(000000-)	Brush-Sweep Spl-45Lg-24 Single Row-Nylon	1
2	54923	(000000-)	Brush-Sweep Spl-45Lg-8 Double Row-Nylon	1
2	54925	(000000-)	Brush-Sweep Spl-45Lg-8 Double Row-Poly and Wire	1
2	59440	(000000-)	Brush-Sweep Spl-45Lg-8 Double Row-Wire	1
2	66019	(000000-)	Brush-Sweep Spl-45Lg-8 Double Row-Poly	1
2	66018	(000000-)	Brush-Sweep Spl-45Lg-5 Double Row-Nylon	1
2	370008	(000000-)	Brush-Sweep Spl-45Lg-Wedg Poly	1
3	59431	(000000-)	Brush-Side Swp -23 Dia-Poly	1
3	59432	(000000-)	Brush-Side Swp -23 Dia-Flatwire	1
3	08013N	(000000-)	Brush-Side Swp -23 Dia-Nylon	1

Fig. 3 - Main Frame Group

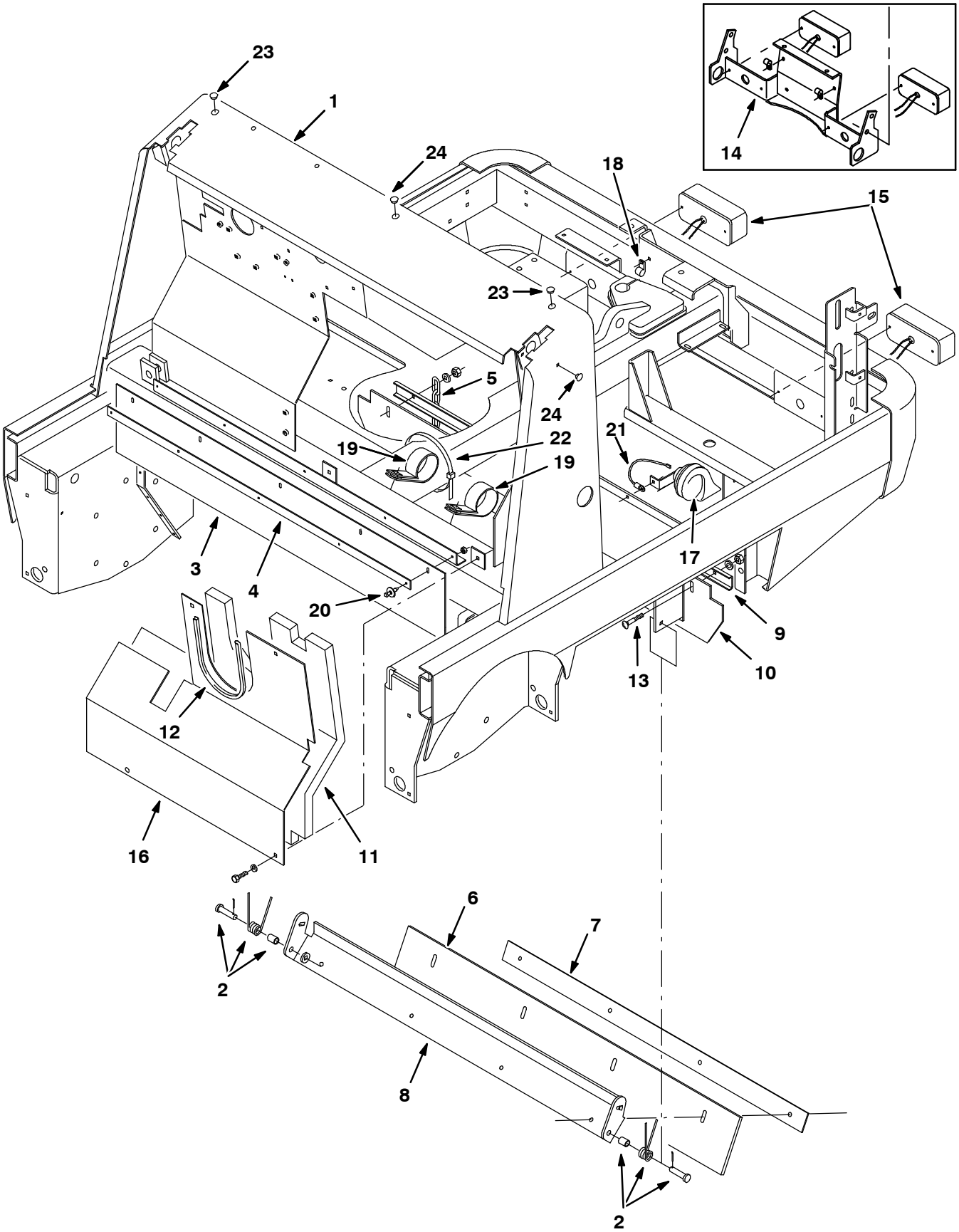

07897/07057

Fig. 3 - Main Frame Group

	Ref.	Tennant Part No.	Machine Serial Number	Description	Qty.
	1	59152	(000000-001586)	Frame Wldt, Main	1
	1	74304	(001587-)	Frame Wldt, Main	1
	2	69904	(000000-)	Spring Assy, Recirculation	~~1~~ 2
	3	56872	(000000-)	Skirt, Hopper, Top	1
	4	56890	(000000-)	Strap, Backing, Hopper	1
	5	09342	(000000-)	Chain, Link#2/0, 5Links Plain	1
	6	54190	(000000-)	Blade, Deflector	1
	6	374517	(000000-)	Skirt, Recirculation, Turf (Option)	1
	7	54184	(000000-)	Strip, Retainer, Seal	1
	8	54182	(000000-)	Bracket, Flap, Recirculation	1
	9	54192	(000000-)	Channel, Retainer, Seal, Rear	1
	10	54197	(000000-)	Skirt, Seal, M Br	1
	11	53491	(000000-)	Insulation, Acoustic, Firewall	1
	12	62595-21	(000000-)	Molding, Trim 11-14Ga 25.62	1
	13	69915	(000000-)	Bolt-Carrm 8X1.25 40 4.6 Pltd	4
	14	72156	(000000- xxxxxx)	Bracket Replacement Kit, Taillight	1
	14	71024	(xxxxxx-001586)	Bracket Wldt, Taillight	1
∇	15	59949	(000000-)	Taillight Assy	2
▲		45780	(000000-)	Bulb, 12V .5A 4CP#1157	1
	16	59662	(000000-001375)	Panel, Engine (Replaced By 72152)	1
	16	72152	(001376-)	Panel, Engine	1
	17	21642	(000000-)	Horn, 12V	1
	18	67767	(000000-)	Clamp - Cable, .69 Dia .62 Wth	3
	19	53468	(000000-)	Clamp, Hose	3
	20	72968	(000000-)	Rivet, Plastic .250x.898	5
	21	70284	(000000-)	Wire Assy, Horn Ground, 16 Ga x 6	1
	22	222809	(000000-)	Cable, 9" Bundle Dia	3
	23	57167	(000000-)	Plugbtn .62H .03-.12 Blacknyl	2
	24	01314	(000000-)	Plugbtn .38H .03-.12 Blacknyl	3

Fig. 4 - Right Brush Door Group

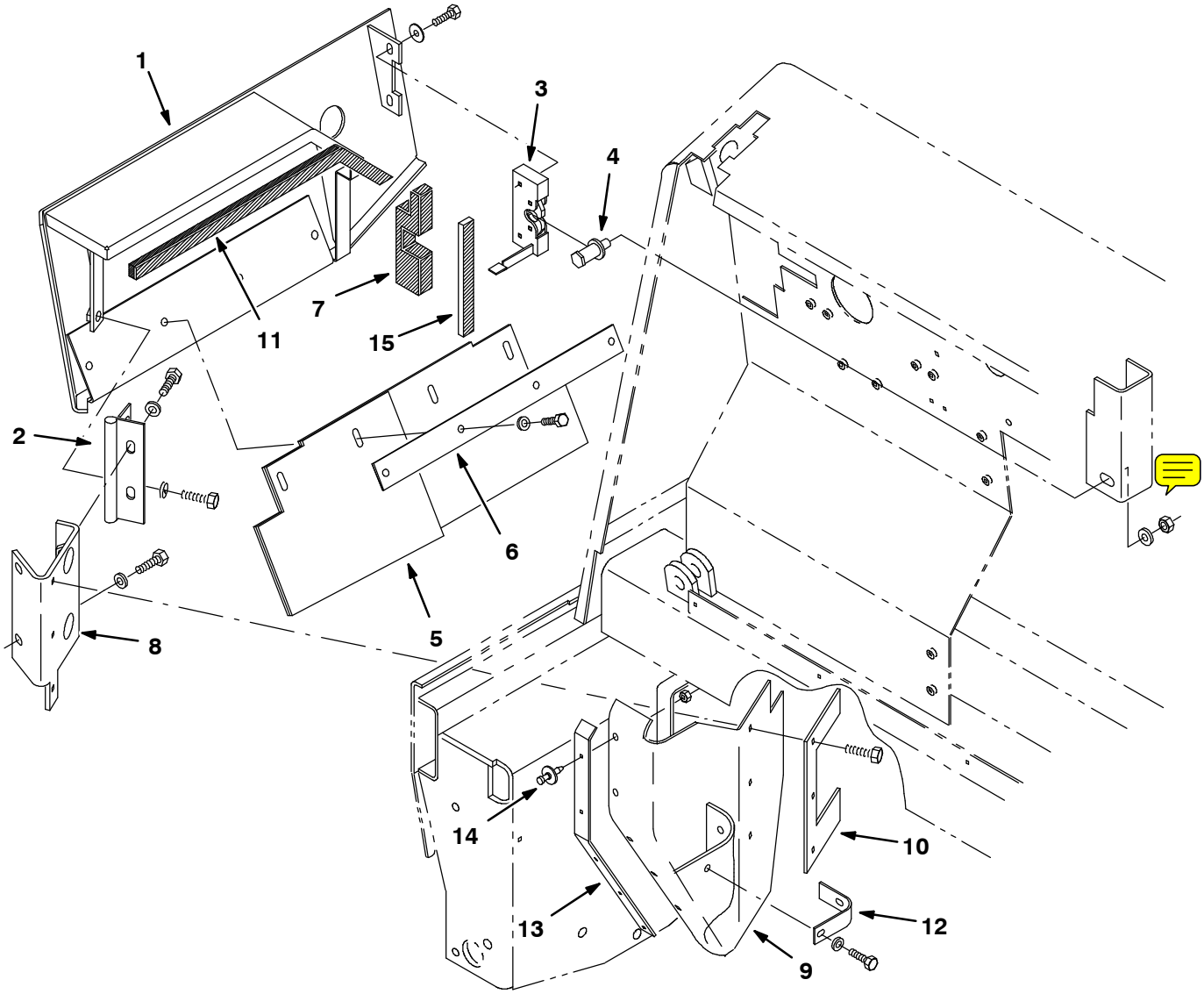

2 72125 (000000-001270) Hinge Repl. Kit 1

Ref.	Tennant Part No.	Machine Serial Number	Description	Qty.
1	59761	(000000–)	Door Wldt, Brush, Rh	1
2	72120	(001271-)	Hinge, Door, Brush	1
3	59195	(000000–)	Latch, Hook, Rh	1
4	59192	(000000–)	Latch, Bolt	1
5	70276	(000000–)	Skirt Assy, Brush Door, Rh	1
6	55433	(000000–)	Strip, Retainer, Skirt	1
7	59537	(000000–)	Seal, Door, Brush, Rh	1
8	72118	(000000–)	Bracket, Mtg, Hinge, Rh	1
9	72069	(000000–)	Skirt, Deflector	1
10	59692	(000000–)	Strap, Deflector	1
11	69931	(000000–)	Seal, Foam Rbr	1
12	58770	(000000–)	Strip, Retainer	1
13	56914	(000000–)	Strap	1
14	72968	(000000–)	Rivet, Plastic .250x.898	5
15	13301	(000000–)	Seal, Rbr, .31 x .75 x 7.0	1

Fig. 5 - Left Brush Door Group

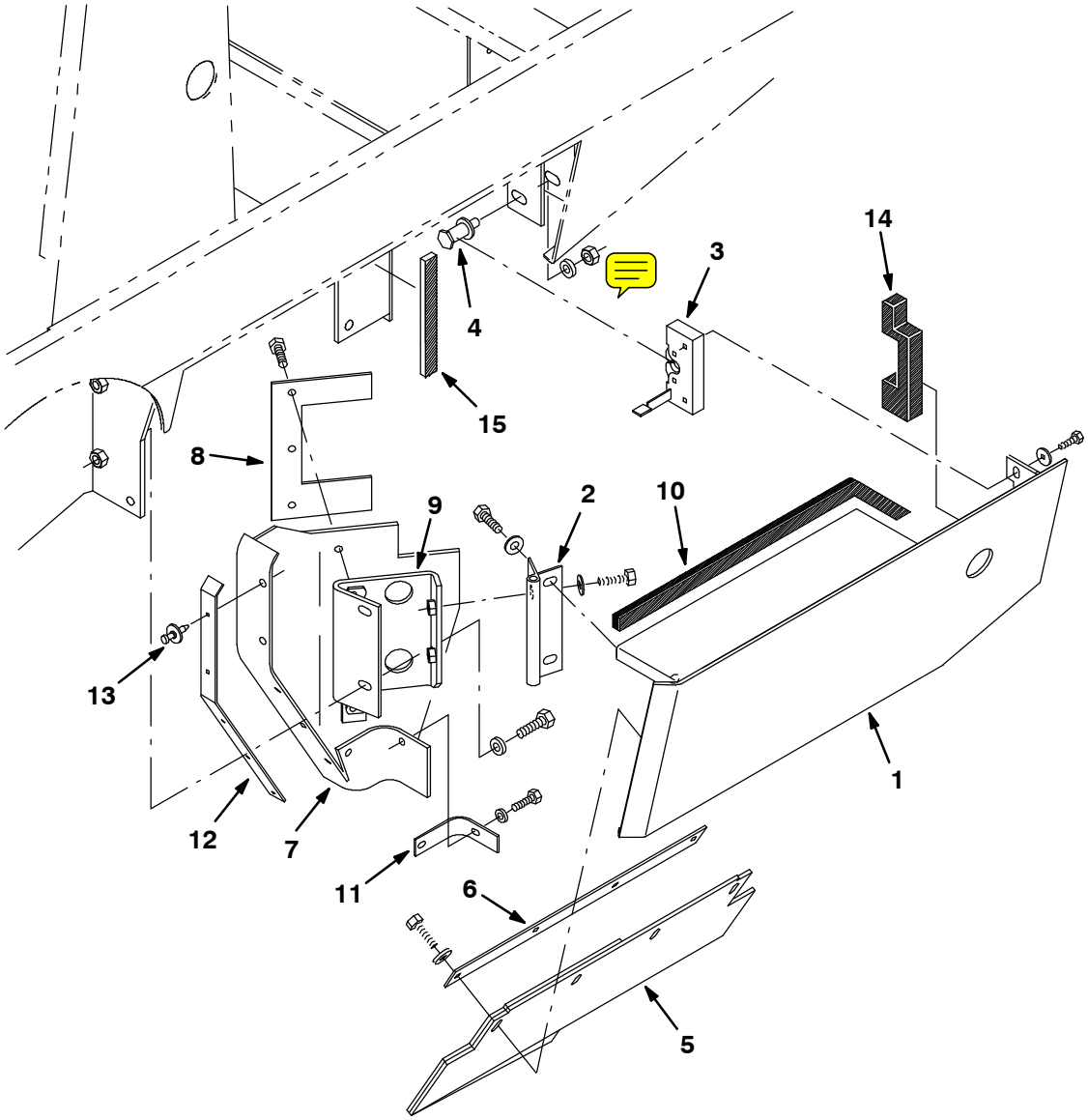

2 72125 (000000-001270) Hinge Repl. Kit .....1)4

Ref.	Tennant Part No.	Machine Serial Number	Description	Qty.
1	59760	(000000-)	Door Wldt, Brush, Lh	1
2	72120	(001271-)	Hinge, Door, Brush	1
3	59194	(000000-)	Latch, Hook, Lh	1
4	59192	(000000-)	Latch, Bolt	1
5	70275	(000000-)	Skirt Assy, Brush Door, Lh	1
6	55433	(000000-)	Strip, Retainer, Skirt	1
7	72069	(000000-)	Skirt, Deflector	1
8	59692	(000000-)	Strap, Deflector	1
9	72119	(000000-)	Bracket, Mtg, Hinge, Lh	1
10	69931	(000000-)	Seal, Foam Rbr	1
11	58770	(000000-)	Strip, Retainer	1
12	56914	(000000-)	Strap	1
13	72968	(000000-)	Rivet, Plastic .250x.898	5
14	59538	(000000-)	Seal, Door, Brush, Lh	1
15	13301	(000000-)	Seal, Rbr, .31 x .75 x 7.0	1

Fig. 6 - Seat and Shroud Group

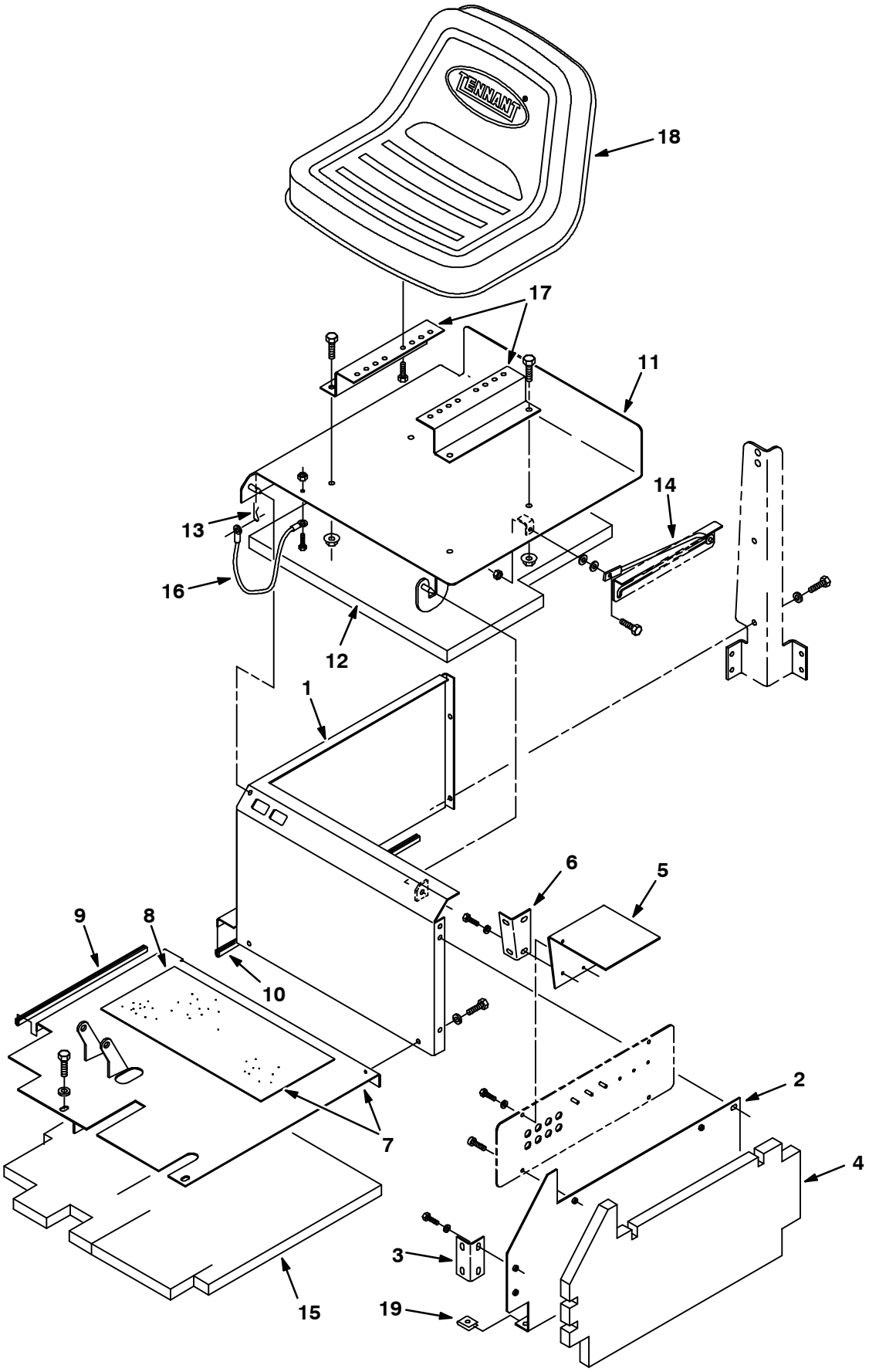

07889/07049

Fig. 6 - Seat and Shroud Group

	Ref.	Tennant Part No.	Machine Serial Number	Description	Qty.
	1	58297	(000000-)	Panel Wldt, Sppt, Seat	1
	2	54030	(000000-)	Panel, Inside	1
	3	59771	(000000-)	Bracket	1
	4	53494	(000000-)	Insulation, Acoustic, Panel	1
	5	59035	(000000-)	Panel, Filler, Upper	1
	6	59766	(000000-)	Bracket, Inside	1
∇	7	72138	(000000-)	Plate, Floor w/tread	1
▲	8	16369	(000000-)	Pad, Tread	1
	9	62595-22	(000000-)	Molding, Trim 11-14Ga 14.20	1
	10	62595-23	(000000-)	Molding, Trim 11-14Ga 22.80	1
	11	53839	(000000-)	Cover Wldt, Sppt, Seat	1
	12	59822	(000000-)	Insulation, Acoustic, Seat	1
	13	44906	(000000-)	Pin,Hair Cotter #Lhcot-2,Leitk	1
	14	54615	(000000-)	Rod Wldt, Seat	1
	15	53492	(000000-)	Insulation, Acoustic, Plate	1
	16	57702	(000000-)	Cable	1
	17	54055	(000000-)	Rail, Seat, Rh	2
	18	82342	(000000-)	Seat	1
	19	58595	(000000-)	Nut, U M 8X1.25 Pltd	1

Fig. 7 - Right Grille Group

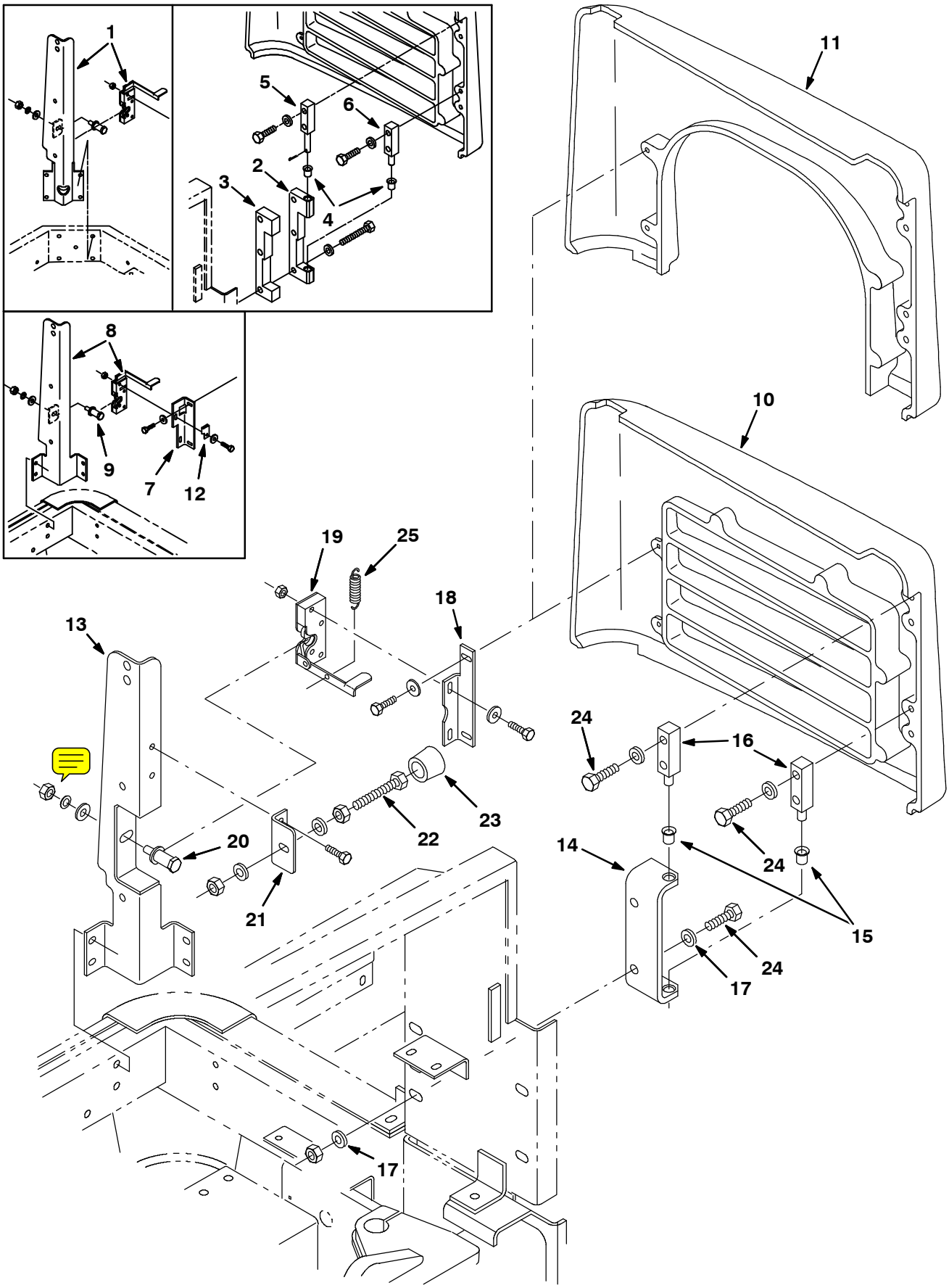

07829/07073

Fig. 7 - Right Grille Group

Ref.	Tennant Part No.	Machine Serial Number	Description	Qty.
1	74493	(000000-001586)	Latch/Channel Repl. Kit	1
2	58564	(000000-001497)	Block, Pivot (Replaced By 72179)	1
3	58571	(000000-001497)	Spacer, Pivot Block (Replaced By 72179)	1
4	58585	(000000-001497)	Bearing, Flange	2
5	58576	(000000-001497)	Pin, Pivot, Upper	1
6	58811	(000000-001497)	Pin, Pivot, Lower	1
7	59549	(000000-002016)	Bracket, Mtg, Latch (Replaced By 74456)	1
8	74491	(001587-002016)	Latch/Channel Repl. Kit	1
9	59703	(000000-002016)	Bolt, Hook, Rh	1
10	54552	(000000-)	Grille, Right, (Gasoline)	1
11	54556	(000000-)	Grille, Right, (LPG)	1
12	69973	(000000-002016)	Clip (Replaced By None)	1
13	70256	(002017-)	Channel Wldt, Corner Post	1
14	72179	(001498-)	Bracket, Grille	1
15	15648	(001498-)	Bearing, Flange	2
16	72176	(001498-)	Pin, Pivot, Upper	2
17	36328	(000000-)	Washer-Belleville .50 Pltd	4
18	74456	(002017-)	Bracket, Mtg. Latch	1
19	72473	(002017-)	Latch, Hook, RH	1
20	59192	(002017-)	Latch, Bolt	1
21	70249	(003088-)	Bracket, Stop Bolt, Rear Grill	1
22	45214	(003088-)	Scr-Hex .38-16x2.50 Full Thd	1
23	01318	(003088-)	Tip, Rubber	1
24	69972	(000000-)	Src-Hex M12x1.75 40 10.9Pltd	6
25	59870	(000000-)	Sprng, Tens, 0.50 Odx.05 Wire 2.5L	1

Fig. 8 - Left Grille and Hydraulic Cooler Group

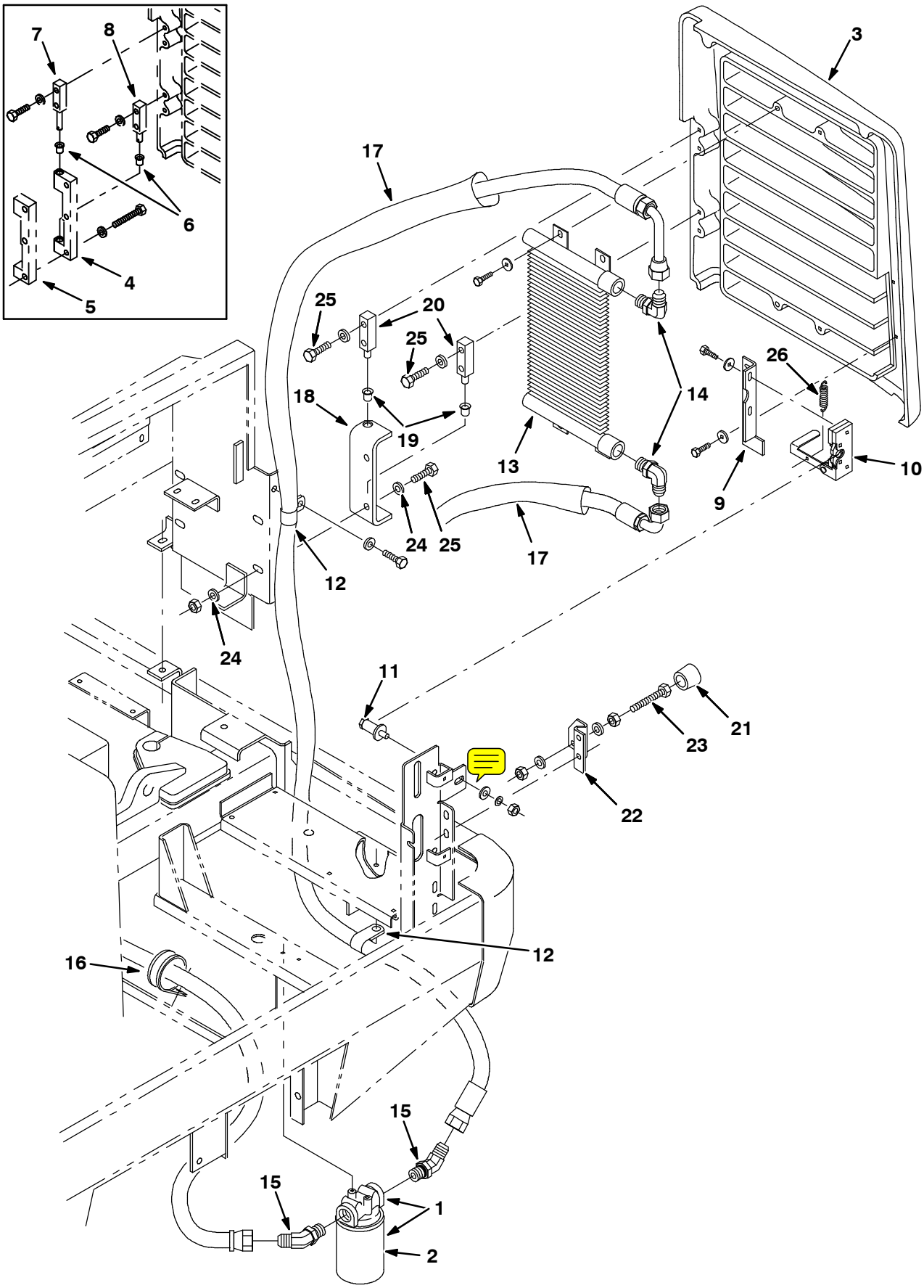

07832/07076

Fig. 8 - Left Grille and Hydraulic Cooler Group

	Ref.	Tennant Part No.	Machine Serial Number	Description	Qty.
∇	1	55619	(000000-)	Filter Assy, Spin-On 10Micron	1
▲	2	55740	(000000-)	Filter Element Ph	1
	3	54553	(000000-)	Grille, Left	1
	4	58564	(000000-001497)	Block, Pivot (Repl. By 72179)	1
	5	58571	(000000-001497)	Spacer, Pivot Block (Repl. By 72179)	1
	6	58585	(000000-001497)	Bearing, Flange	2
	7	58576	(000000-001497)	Pin, Pivot, Upper	1
	8	58811	(000000-001497)	Pin, Pivot, Lower	1
	9	70252	(000000-)	Bracket, Mtg, Latch	1
	10	59695	(000000-)	Latch, Hook, Lh	1
	11	59192	(000000-)	Latch, Bolt	1
	12	53466	(000000-)	Clamp, Hose	2
	13	82798	(000000-)	Cooler-Hyd 12 0500	1
	14	46481	(000000-)	Ftg-Hyd E90 Jm12/Om12	2
	15	16081	(000000-)	Ftg-Hyd E45 Jm12/Om12	2
	16	41016	(000000-)	Clamp-Cable, 2.25Dia 1.00Wth	1
	17	87676	(000000-)	Sleeve-Nyln #24 30.0L	2
	18	72179	(001498-)	Bracket, Grille	1
	19	15648	(001498-)	Bearing, Flange	2
	20	72176	(001498-)	Pin, Pivot, Upper	2
	21	01318	(003088-)	Tip, Rubber	1
	22	70248	(003088-)	Bracket, Rear Grill Stop Bolt	1
	23	55347	(003088-)	Scr-Hex .38-16x2.00 Full Thd	1
	24	36328	(000000-)	Washer-Belleville .50 Pltd	4
	25	69972	(000000-)	Scr-Hex M12x1.75 40 10.9Pltd	6
	26	59870	(000000-)	Sprng, Tens, 0.50 Odx.05 Wire 2.5L	1

Fig. 9 - Engine Cover Group

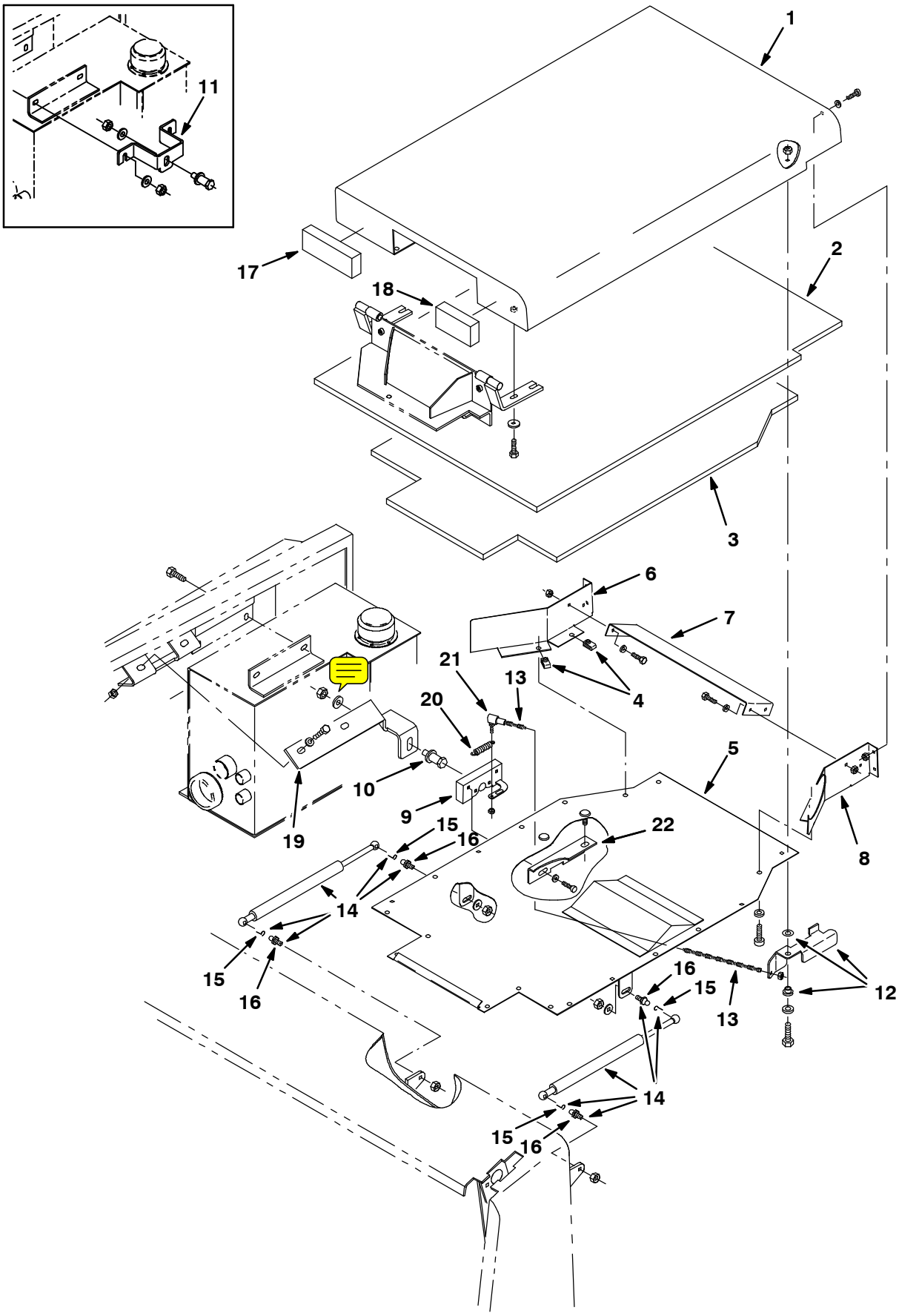

07831/07075

Fig. 9 - Engine Cover Group

	Ref.	Tennant Part No.	Machine Serial Number	Description	Qty.
	1	58977	(000000-)	Cover Wldt, Engine	1
	2	59019	(000000-)	Foam, Engine Cover	1
	3	58999	(000000-)	Foam, Engine Cover, Bottom	1
	4	12271	(000000-)	Nut, U M 6X1.0 Pltd	20
	5	70143	(000000-002859)	Repl Kit, Plate, Bottom F/59843	1
	5	70145	(002860-)	Plate Wldt, Cover, Bottom	1
	6	69952	(000000-)	Plate, Deflector, Engine Cover	1
	7	58849	(000000-)	Bracket, Deflector, Eng Cover	1
	8	69951	(000000-)	Plate, Deflector, Eng Cover	1
	9	59514	(000000-)	Latch	1
	10	59192	(000000-)	Latch, Bolt	1
	11	72091	(000000-001226)	Bracket, Repl Kit, Latch	1
	12	69907	(000000-)	Handle Assy, Latch, Eng Cover	1
	13	55048	(000000-)	Rod, Latch, Engine Cover	1
∇	14	69906	(000000-)	Spring-Gas Assy, Eng Cover	2
▲	15	64595	(000000-)	Clip, Spring	2
▲	16	58494	(000000-)	Stud, Ball	2
	17	69986	(000000-)	Insulation, Acoustic, Engine Cover	1
	18	69987	(000000-)	Insulation, Acoustic, Engine Cover	1
	19	70136	(001227-)	Bracket, Latch	1
	20	53091	(000000-)	Sprng,Tens,0.50Odx.05Wire 1.0L	1
	21	14601	(000000-)	Balljoint .250-28	1
	22	70142	(002860-)	Bracket, Latch, Bolt, Eng Cover	1

Fig. 10 - Engine Side Door Group

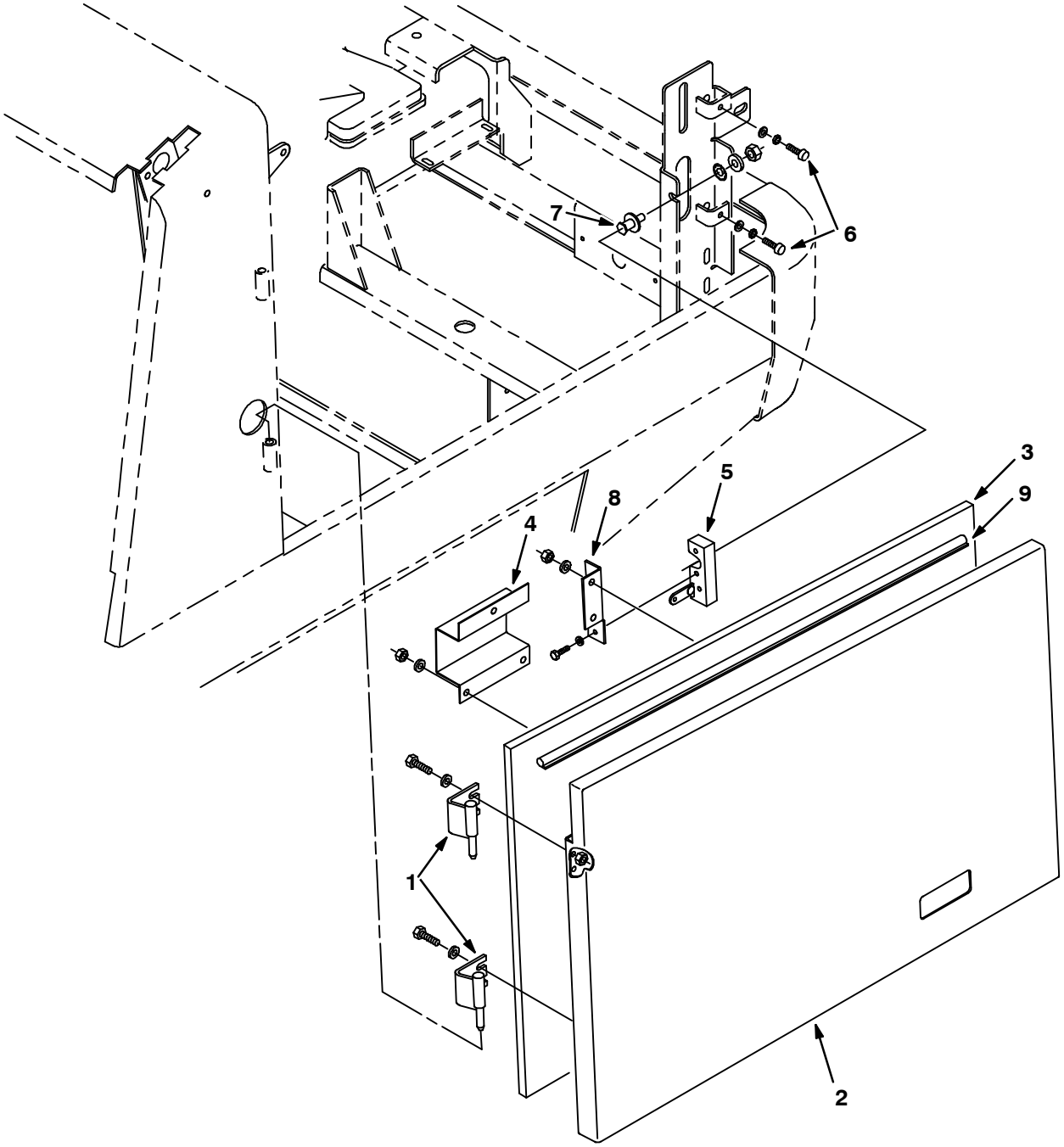

07847/07091

Fig. 10 - Engine Side Door Group

Ref.	Tennant Part No.	Machine Serial Number	Description	Qty.
1	59377	(000000–)	Hinge Wldt, Door, Engine	2
2	59830	(000000–)	Door Wldt	1
3	59018	(000000–)	Foam, Door, Engine, Side	1
4	59829	(000000–)	Bracket, Door	1
5	59661	(000000–)	Latch	1
6	75128	(000000–)	Spindle, Adjustment	2
7	72154	(000000–)	Bolt, Latch	1
8	59828	(000000–)	Bracket, Latch, Door	1
9	59647	(000000–)	Seal, Rubber	1

Fig. 11 - Steering and Firewall Group

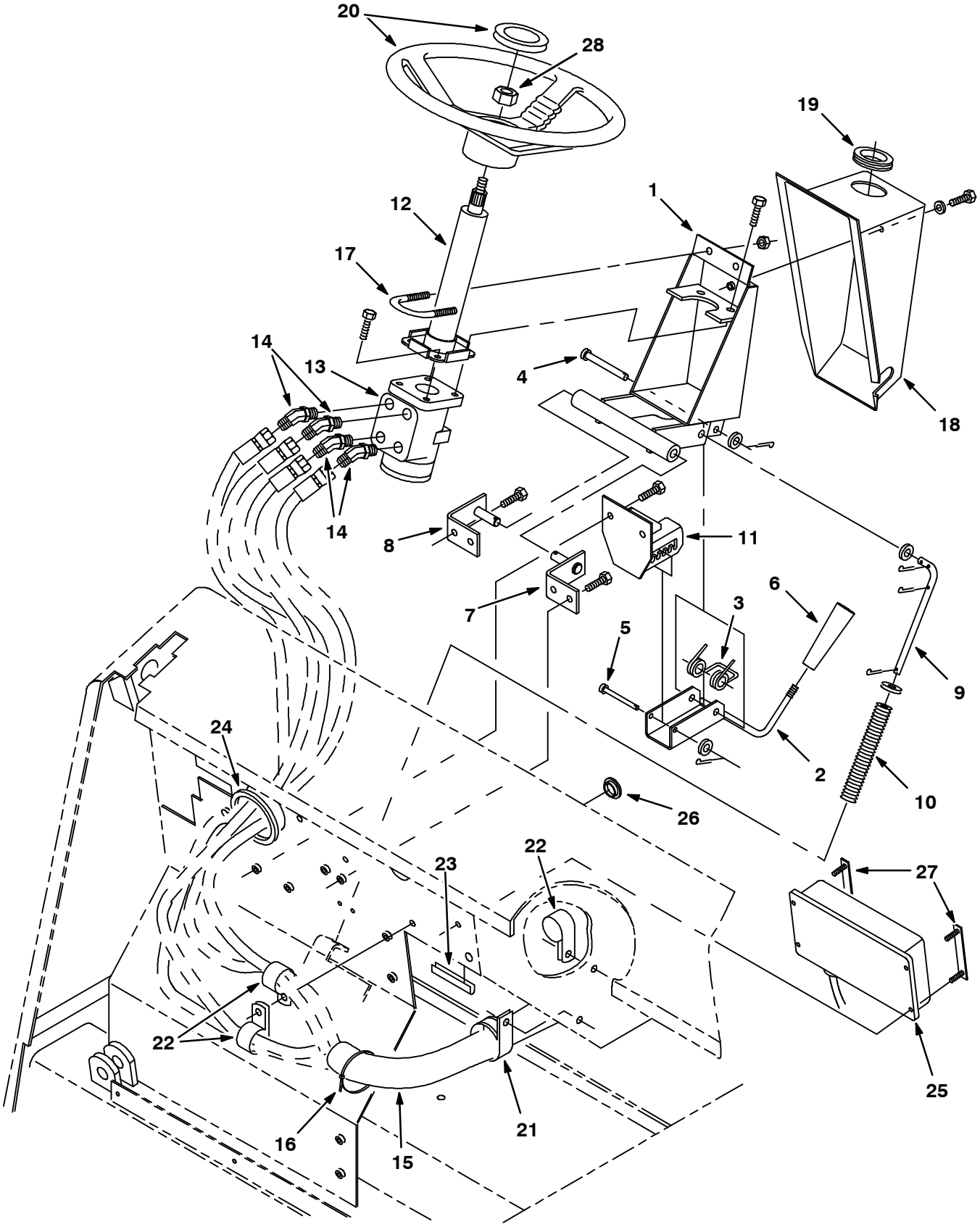

07891/07051

Fig. 11 - Steering and Firewall Group

Ref.	Tennant Part No.	Machine Serial Number	Description	Qty.
1	56373	(000000-)	Bracket Wldt, Valve	1
2	56379	(000000-)	Lever Wldt, Tilt	1
3	56198	(000000-)	Spring, Torsion	1
4	23191	(000000-)	Pin,Clevis,0.37 Dia.X 3.00 Lg	1
5	04733-10	(000000-)	Pin,Clevis,0.25 Dia.X 2.44 Lg	1
6	59940	(000000-)	Knob, Tapered M8	1
7	58665	(000000-)	Bracket Wldt, Mtg, Steering,Lh	1
8	58667	(000000-)	Bracket Wldt, Mtg, Steering,Rh	1
9	56392	(000000-)	Rod, Spring	1
10	63852	(000000-)	Sprng,Comp,0.74Idx.11Wire 5.5L	1
11	56385	(000000-)	Bracket Wldt, Notched	1
12	57935	(000000-)	Column, Steering	1
13	54022	(000000-002221)	Steer Control, Hyd (See Breakdowns) (Repl. by 74172)	1
13	74172	(002222-)	Steer Control, Hyd (See Breakdowns)	1
14	47522	(000000-)	Ftg-Hyd E45 Jm06/Om06	4
15	34330	(000000-)	Sleeve-Nyln #38 30.0L	1
16	49263	(000000-)	Tie, Cable 3.00D Max 11.41Lg	3
17	58748	(000000-)	U - Bolt	1
18	56362	(000000-)	Cover, Steering	1
19	54345	(000000-)	Grommet,Rbr,1.62Id,For .13Matl	1
20	56398	(000000-)	Wheel, Steering, 14 Dia X 36T	1
21	41016	(000000-)	Clamp-Cable, 2.25Dia 1.00Wth	1
22	53466	(000000-)	Clamp, Hose	3
23	62595-3	(000000-)	Molding, Trim 11-14Ga 5.75	1
24	62595-4	(000000-)	Molding, Trim 11-14Ga 10.00	1
25	56235	(000000-)	Control Box, Gov, 3 Speed	1
26	55035	(000000-)	Plug, Plastic 1.00 D	1
27	59935	(000000-)	Plate Wldt, Governor	2
28	56185	(000000-)	Nut-Hx Jam M20x1.5 4 Pltd	1

Fig. 12 - Instrument Panel Assembly

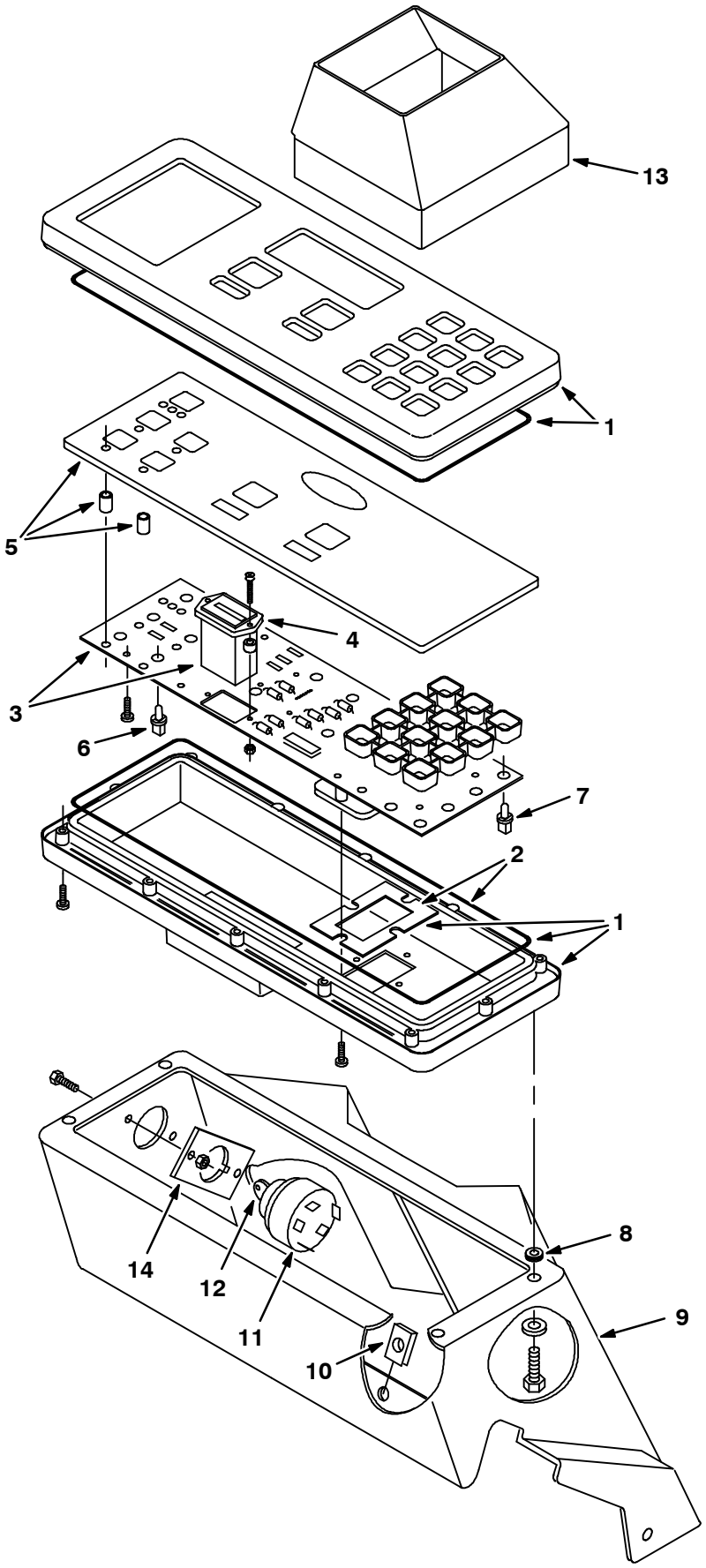

07890/07050

Fig. 12 - Instrument Panel Assembly

	Ref.	Tennant Part No.	Machine Serial Number	Description	Qty.
∇		59970	(000000-)	Replm Kit, Instr Panel	1
▲	1	59976	(000000-)	Replm Kit, Case	1
▲	2	59977	(000000-)	Replm Kit, Seal	1
▲∇	3	59974	(000000-)	Replm Kit, Cir Board	1
▲▲	4	59978	(000000-)	Replm Kit, Hourmeter	1
▲	5	59979	(000000-)	Replm Kit, Touch Panel	1
▲	6	59971	(000000-)	Replm Kit, Lamp, Backlighting (8)	2
▲	7	56346	(000000- (	Replm Kit, Lamp, Fault (8)	1
	8	10632-5	(000000-)	Grommet,Rbr,0.25Id,For .09Matl	4
	9	54342	(000000-)	Panel Assy, Instr	1
	10	12271	(000000-)	Nut, U M 6X1.0 Pltd	2
∇	11	87536	(000000-)	Switch Ignition	1
▲	12	87866	(000000-)	Key Set,Switch Ku	1
	13	72109	(000000-xxxxxx)	Repl Kit, Sun Shield	1
	14	19768	(000000-)	Plate, Reinforcement-Ignition	1

Fig. 13 - Side Instrument Panel Group

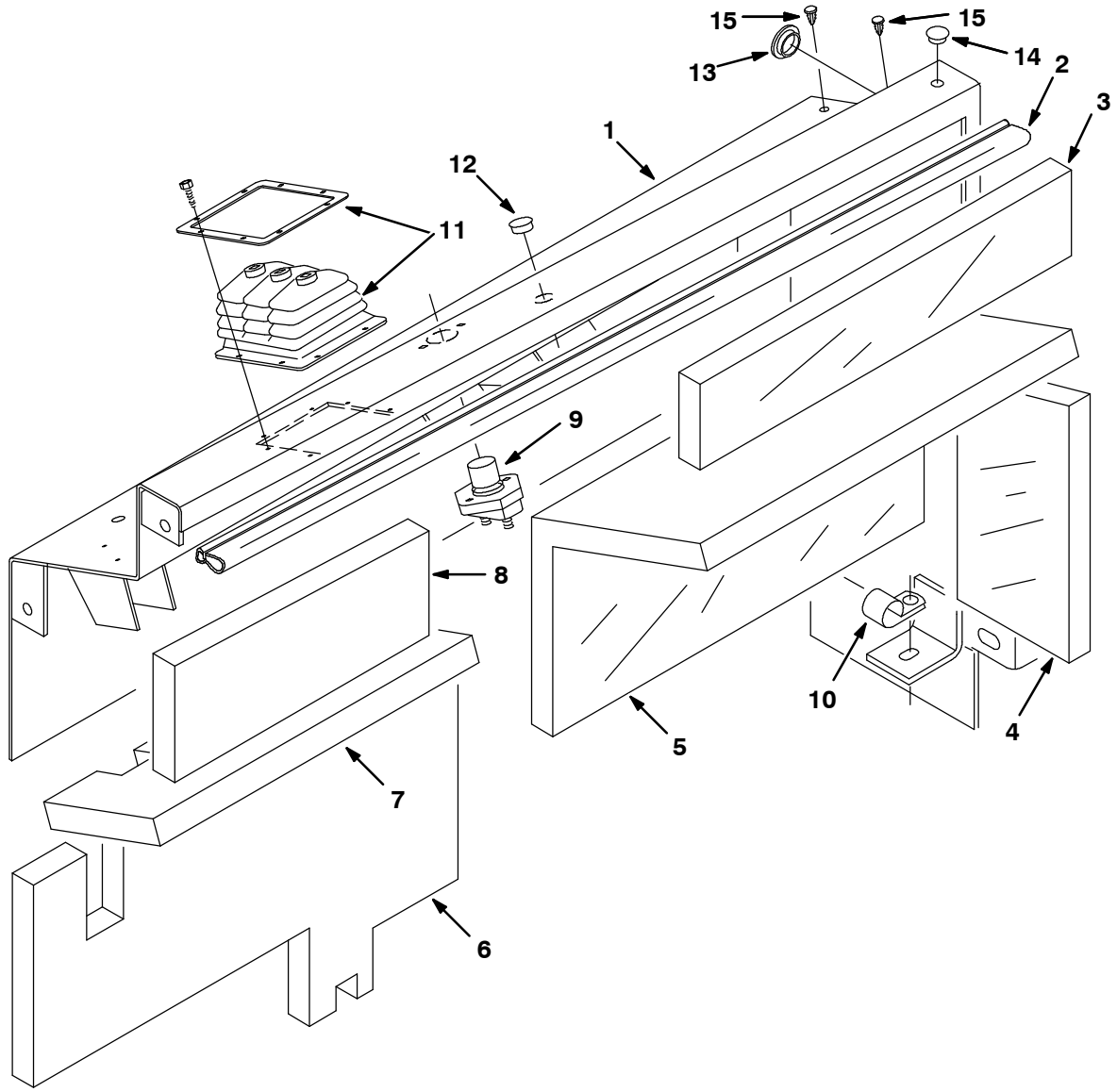

07918/07510

Ref.	Tennant Part No.	Machine Serial Number	Description	Qty.
1	59824	(000000-)	Panel Assy, Instrument w/label	1
2	59647	(000000-)	Seal, Rubber	1
3	59623	(000000-)	Insulation, Acoustic	1
4	59622	(000000-)	Insulation, Acoustic	1
5	59621	(000000-)	Insulation, Acoustic	1
6	59628	(000000-)	Insulation, Acoustic	1
7	59636	(000000-)	Insulation, Acoustic	1
8	59629	(000000-)	Insulation, Acoustic	1
9	44078	(000000-)	Switch, Pushmom, Spst100A 12V	1
10	69234	(000000-)	Clamp-Cable, 1.00Dia. .62Wth	2
11	69909	(000000-)	Bellows Assy, Valve	1
12	01314	(000000-)	Plugbtn .38H .03-.12 Blacknyl (LPG only)	1
13	55035	(000000-)	Plug, Plastic, 1.00 D	1
14	01314	(000000-)	Plugbtn .38h .03-.12 Blacknyl	1
15	77399	(000000-)	Clip, Pine-tree .236h Plastic	2

Fig. 14 - Circuit Breaker and Relay Group

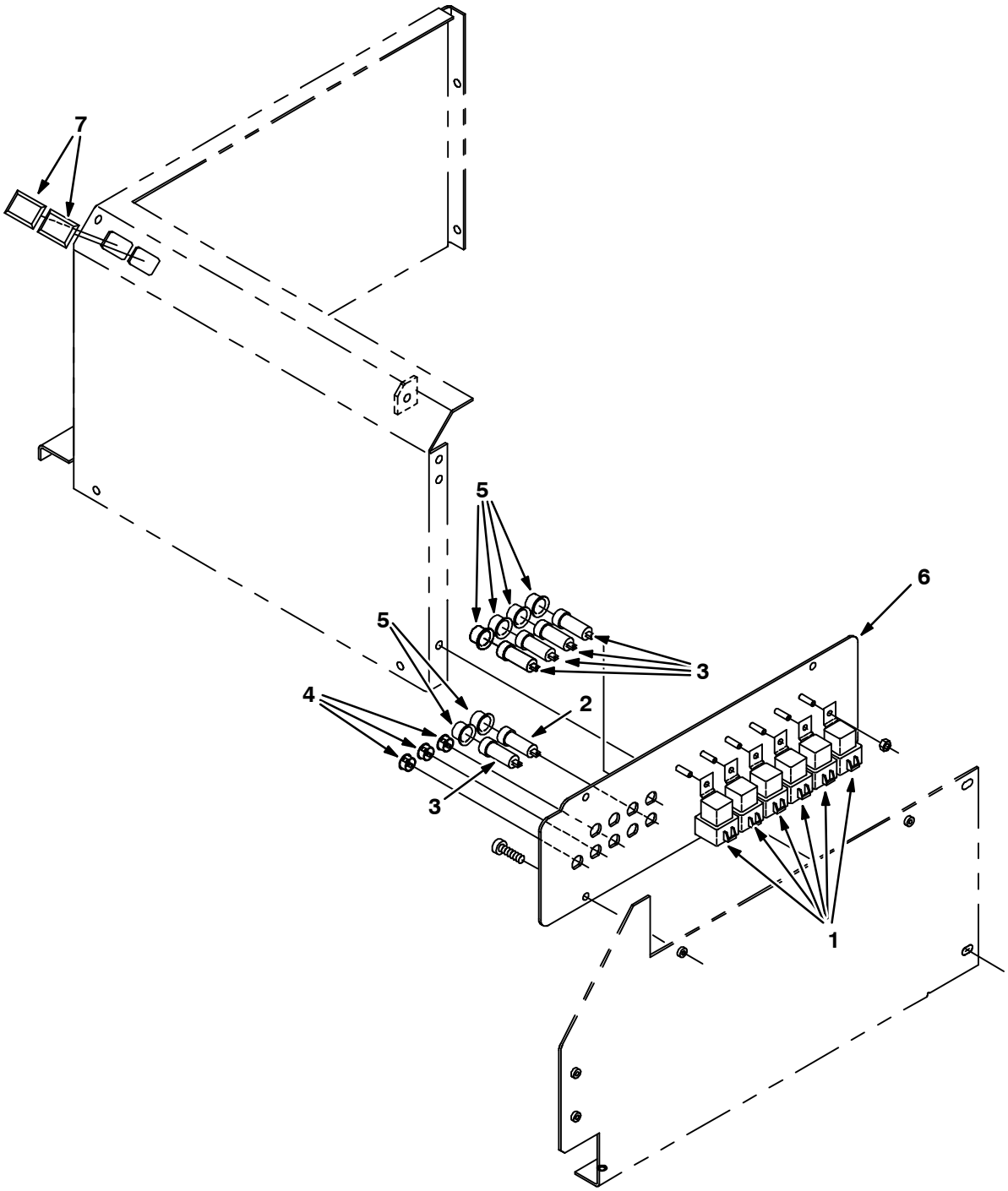

07852/07096

Ref.	Tennant Part No.	Machine Serial Number	Description	Qty.
1	56186	(000000-)	Relay, Shrouded, 12 Vdc	6
2	87583	(000000-)	Breaker-Circuit, 2.5 Resetbl	1
3	57803	(000000-)	Breaker-Circuit, 15 Resetbl	5
4	57167	(000000-)	Plugbtn .62H .03-.12 Blacknyl	3
5	57751	(000000-)	Boot-Circuit Breaker	6
6	56188	(000000-)	Plate, Circuit Breaker	1
7	57772	(000000-)	Plate-Cover	2

Fig. 15 - Engine Group

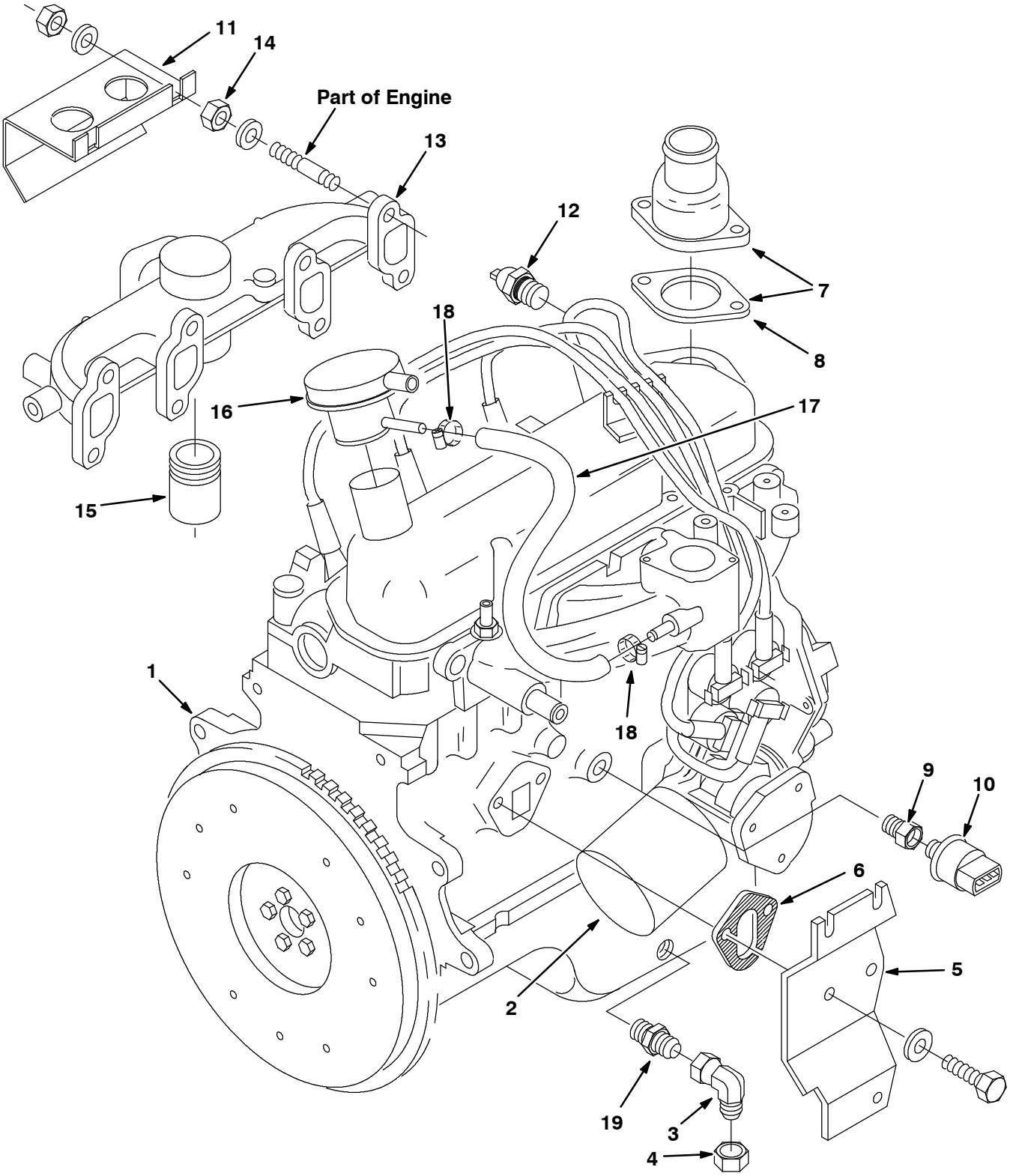

07854/07040

Fig. 15 - Engine Group

	Ref.	Tennant Part No.	Machine Serial Number	Description	Qty.
	1	30297	(000000-001060)	Engine Asy Rep.By61498 (See 1.1L Engine Breakdown)	1
	1	61497	(001061-004108)	Engine Assy, 5 Brg Vsg-411 (See 1.1L Engine Breakdown)	1
	1	30296	(004109-)	Engine, Vsg-413-89W/Label (See 1.3L Engine Breakdown)	1
	2	19205	(000000-)	Filter, Eng Oil, Spin-On	1
	3	47504	(000000-)	Ftg-Hyd E90 Jm06/Jf06	1
	4	40625	(000000-)	Ftg-Hyd Cap Jf06	1
	5	31516	(000000-)	Bracket, Mtg, Actuator	1
	6	02887	(000000-)	Gasket, Fuel Pump 1.1-1.6Liter	1
∇	7	19689	(000000-)	Connector,Outlet Cylinder Head w/gasket	1
▲	8	54911-25	(000000-)	Gasket - Thermostat Hsg	1
	9	17414	(000000-)	Ftg-Hyd Str Pm04/Pf02	1
	10	79399	(000000-)	Switch, Pressure, Oil	1
	11	30468	(000000-)	Shield Assy, Exhaust	1
	12	58592	(000000-)	Sender-Temperature, Water	1
	13	30316	(000000-)	Manifold, Exhaust	1
	14	08165	(000000-)	Nut Hx Stover M 8X1.25	8
	15	24013	(000000-)	Ftg,Pipe,Nip.Blk1.25Ptx2.0Lg L	1
	16	10795	(000000-004108)	Pcv Breather Fd	1
	16	30306	(004109-)	Cap Assy, Oil Filler, Ford	1
	17	76589-2	(000000-)	Hose Rbr,0.38 Idx .062D 12.0Lg	1
	18	54333	(000000-)	Clamp-Wormdrive, 0.31- 0.88D	2
	19	19200	(000000-)	Ftg-Metric Str Omm14/Jm06	1

Fig. 16 - Engine Mount Group

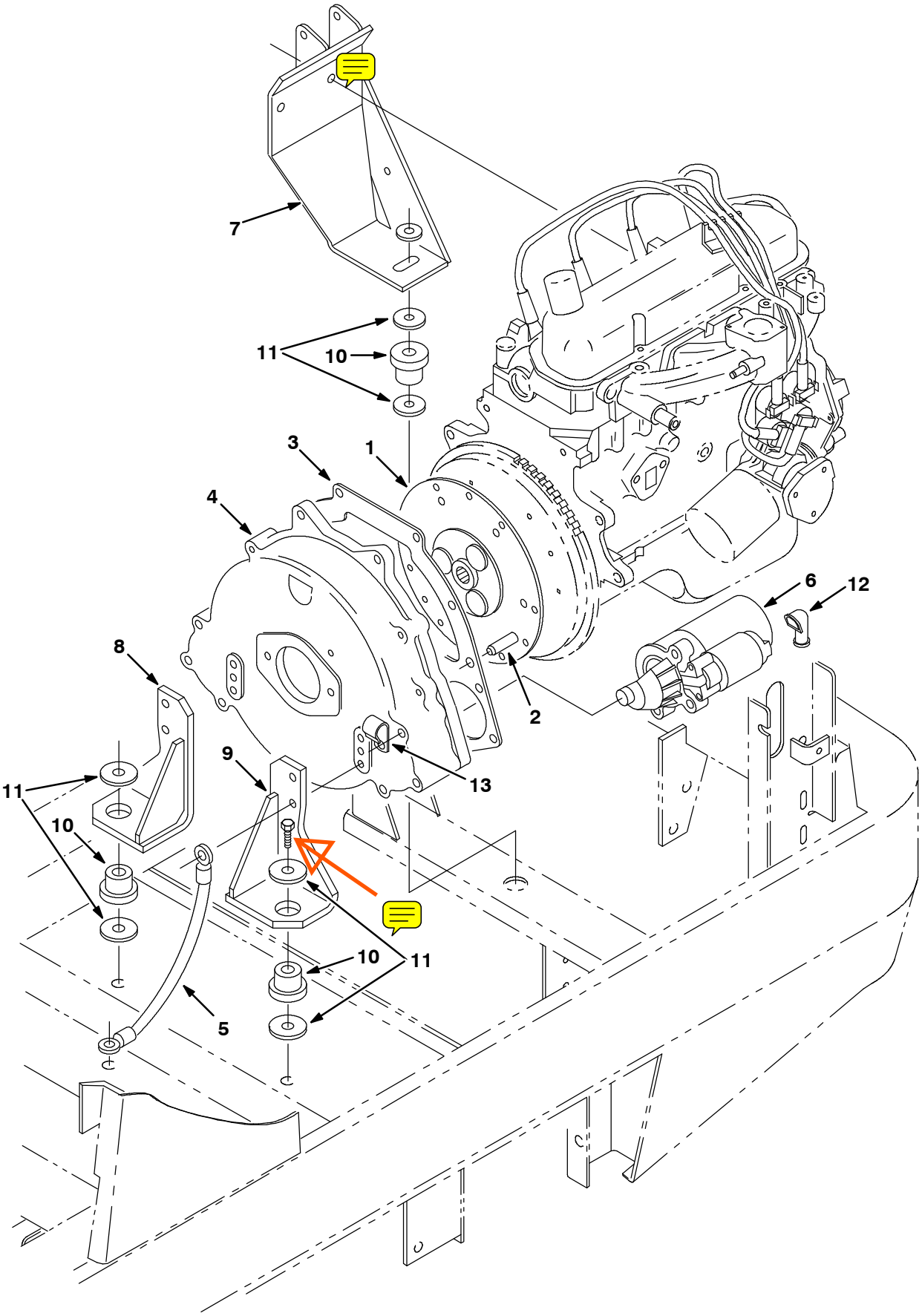

07884/07044

Fig. 16 - Engine Mount Group

Ref.	Tennant Part No.	Machine Serial Number	Description	Qty.
1	19252	(000000-)	Coupling Assy, Flywheel	1
2	54911-16	(000000-)	Dowel,Cyl.Block To Flywhl.Hsg.	2
3	55859	(000000-)	Ring, Locating, Starter	1
4	84604	(000000-003406)	Replm Kit, Housing	1
4	70263	(003407-)	Housing, Flywheel	1
5	57773	(000000-)	Wire Ass'Y-Elect.,Ground	1
6	84588	(000000-003406)	Replm Kit, Starter	1
6	70239	(003407-)	Starter, Ford 1.8 Hp	1
7	374513	(000000-)	Bracket Wldt, Engine	1
8	57755	(000000-)	Bracket Wldt,Mtg,Eng, Rear, Rh	1
9	57754	(000000-)	Bracket Wldt,Mtg,Eng,Rear, Lh	1
10	51176	(000000-)	Dampner, Engine	3
11	04414	(000000-)	Washer, Flat	6
12	02076	(000000-)	Cover, Terminal	1
13	30407	(000000-)	Clip, Keeper, Open	1

Fig. 17 - Carburetor Group, Gasoline

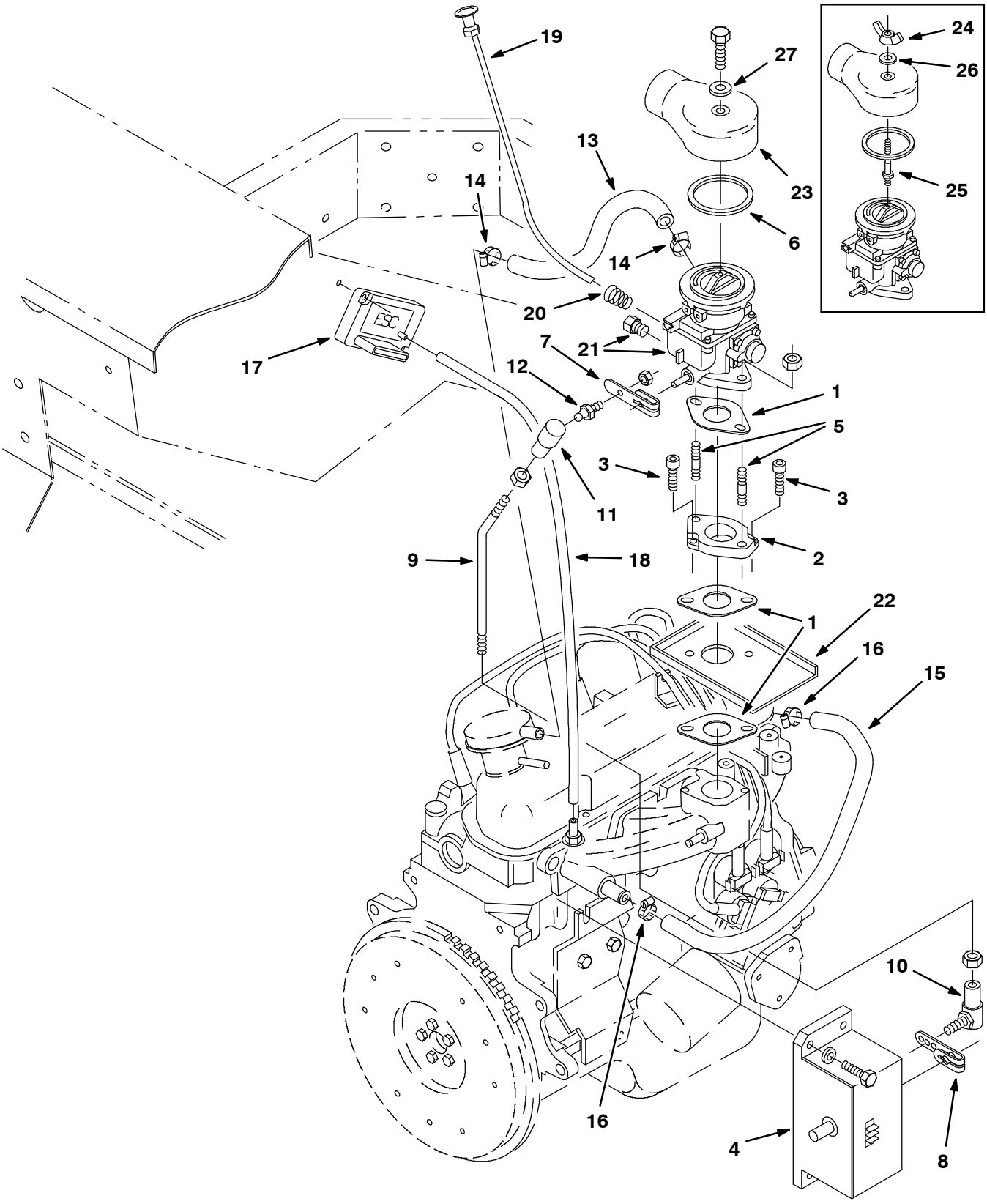

07856/07041

Fig. 17 - Carburetor Group, Gasoline

	Ref.	Tennant Part No.	Machine Serial Number	Description	Qty.
	1	74443	(000000-)	Gasket, Carburetor	3
	2	74345	(000000-)	Adaptor, Mtg, Carb, Machine	1
	3	33951	(000000-)	Scr Soc M 6X1.0 20	2
∇	4	07539	(000000-)	Actuator, Governor	1
▲		374506	(000000-)	Bearing Sf1 Actuator	2
	5	30324	(000000-)	Stud, M8X1.25 20 8.8 Pltd	2
	6	16738	(000000-)	Gasket, Carburetor Air Horn	1
	7	30480	(000000-)	Lever, Carburetor	1
	8	30481	(000000-)	Lever, Governor Actuator	1
	9	30320	(000000-)	Rod, Control, Throttle	1
	10	14601	(000000-)	Balljoint .250-28	1
	11	50332-1	(000000-)	Balljoint .250-28 Body/Clip	1
	12	50332-2	(000000-)	Balljoint .250-28 Ball Stud	1
	13	55195	(000000-)	Hose, Molded .38Id X .75Od	1
	14	63810	(000000-)	Clamp-Wormdrive, 0.56- 1.06D	2
	15	31543	(000000-)	Hose, Heater	1
	16	63810	(000000-)	Clamp-Wormdrive, 0.56- 1.06D	2
	17	30305	(000000-)	Control Assy, Ignition Vsg4113	1
	18	39780-1	(000000-)	Hose Vac.,Rubber, .16Id,28.0L	1
	19	69266	(000000-)	Cable, Choke	1
	20	58846	(000000-)	Spring, Compression,24Diax1.75	1
∇	21	59883	(000000-)	Carburetor, Zenith	1
▲		02738	(000000-)	Carb Repair Kit Ft	1
	22	31550	(000000-)	Shield, Drip	1
	23	57934	(000000-)	Adaptor, Carburetor	1
	24	07252	(000000-002688)	Nut, Wing, Air Horn	1
	25	69970	(000000-002688)	Stud, Carb, Air Horn	1
	26	07251	(000000-002688)	Washer, .195B 1.00D .10 Rbr	1
	27	24924	(002689-)	Washer, .281B .62D .06 Nylon	1

Fig. 18 - Carburetor Group, LPG

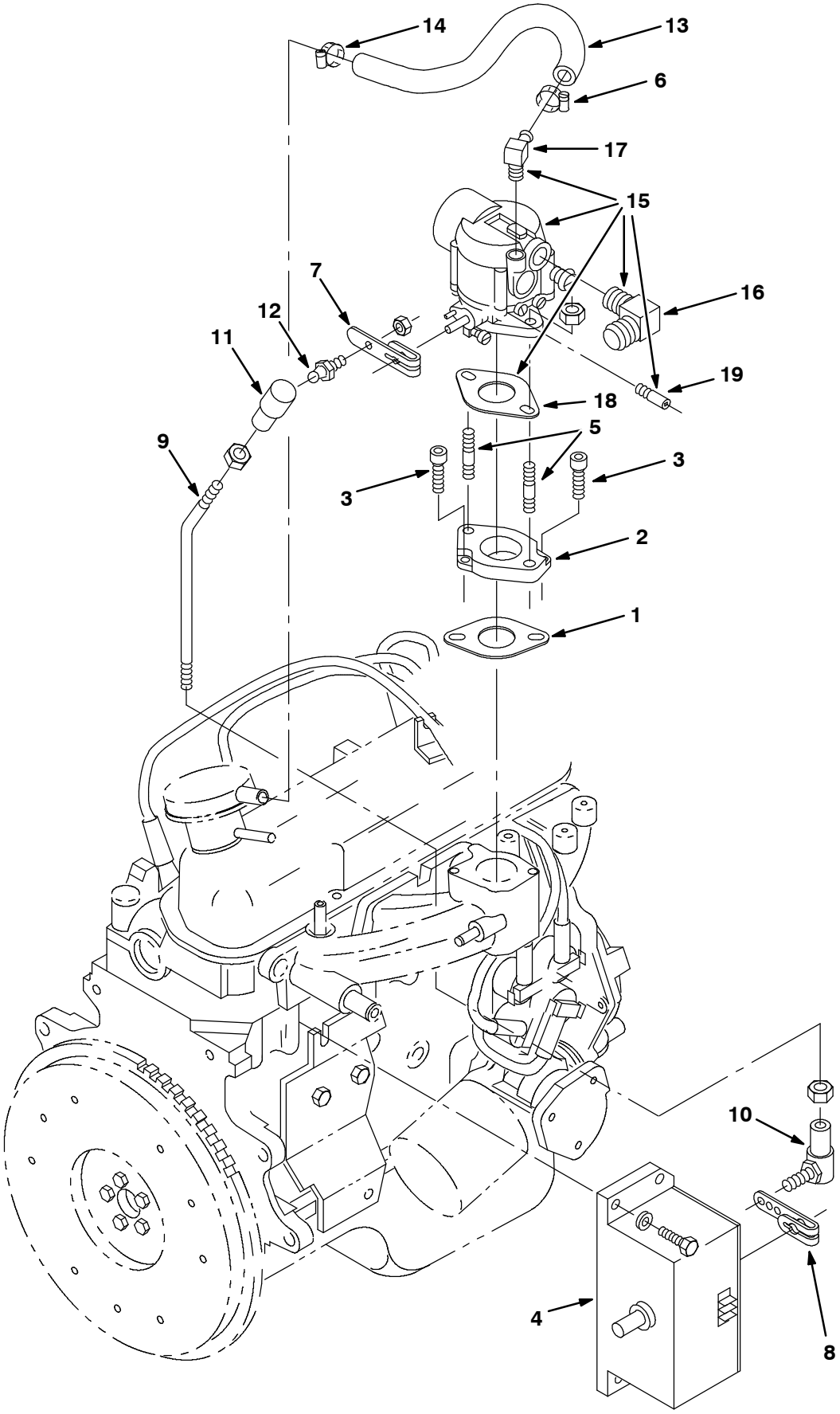

07885/07045

Fig. 18 - Carburetor Group, LPG

	Ref.	Tennant Part No.	Machine Serial Number	Description	Qty.
	1	74443	(000000-)	Gasket, Carburetor	1
	2	74345	(000000-)	Adaptor, Mtg, Carb, Machine	1
	3	33951	(000000-)	Scr Soc M 6X1.0 20	2
	4	07539	(000000-)	Actuator, Governor	1
	5	30324	(000000-)	Stud, M8X1.25 20 8.8 Pltd	2
	6	43844	(000000-)	Clamp-Wormdrive, 0.25-.62D	1
	7	30480	(000000-)	Lever, Carburetor	1
	8	30481	(000000-)	Lever, Governor Actuator	1
	9	30320	(000000-)	Rod, Control, Throttle	1
	10	14601	(000000-)	Balljoint .250-28	1
	11	50332-1	(000000-)	Balljoint .250-28 Body/Clip	1
	12	50332-2	(000000-)	Balljoint .250-28 Ball Stud	1
	13	55195	(000000-)	Hose, Molded .38Id X .75Od	1
	14	63810	(000000-)	Clamp-Wormdrive, 0.56- 1.06D	1
∇	15	72115	(000000-)	Carburetor Asm, LPG	1
▲		78881	(000000-)	Carb.Repair Kit-Lp	1
▲	16	84641	(000000-)	Ftg-Hyd E90 Spcl Pm06/Jm08	1
▲	17	53029	(000000-)	Fitting, Elbow	1
▲	18	74443	(000000-)	Gasket, Carburetor	1
▲	19	74402	(000000-)	Fitting, Special, Carb	1

Fig. 19 - Vaporizer Group, LPG

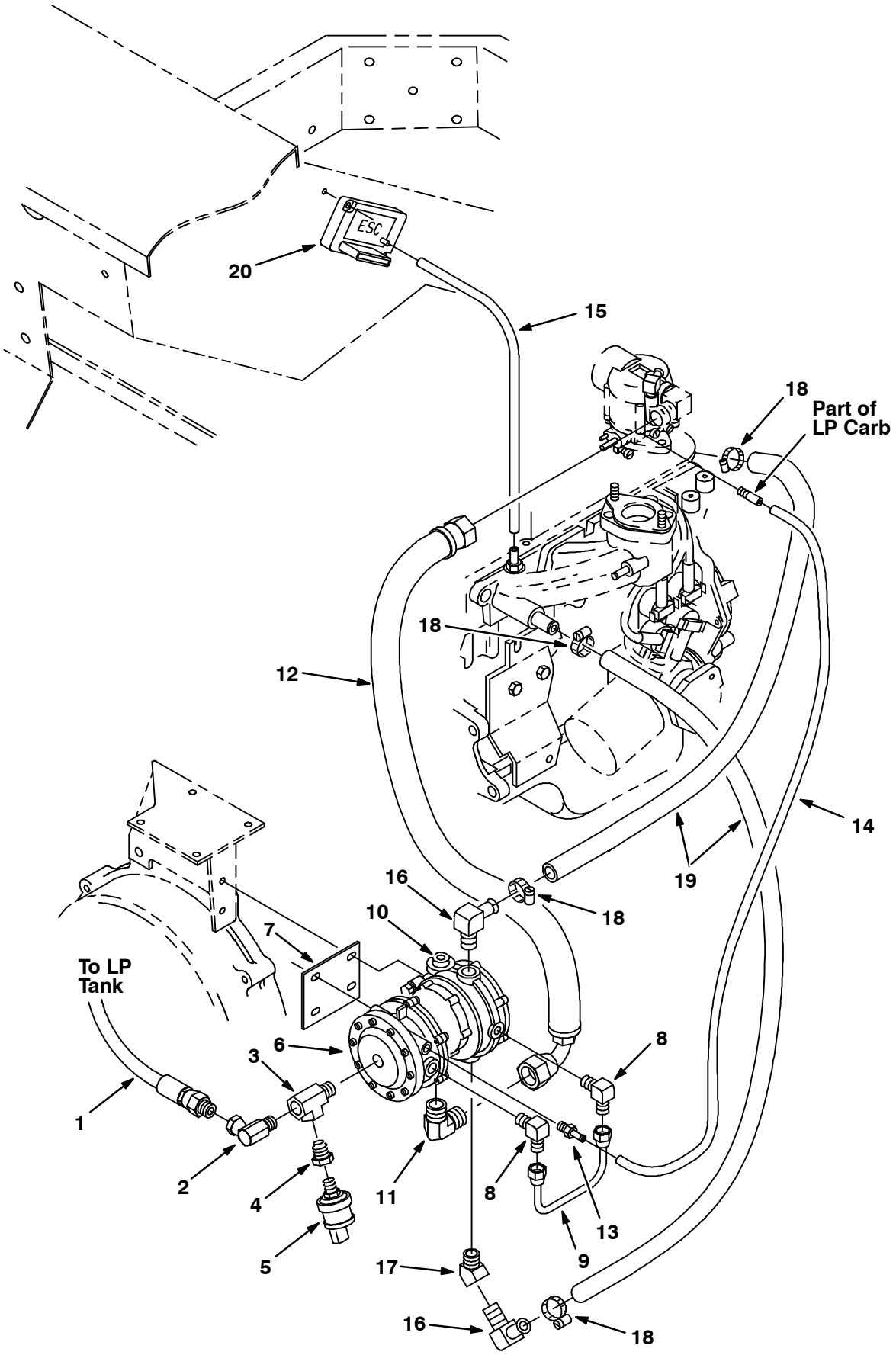

07834/07078

Fig. 19 - Vaporizer Group, LPG

	Ref.	Tennant Part No.	Machine Serial Number	Description	Qty.
	1	19760	(000000-)	Hose, LPG, Spl, .25 I.D. 55.0L	1
	2	11442-1	(000000-)	Ftg-El90 Npt/Npt S04Pf-04Pm	1
	3	56976A	(000000-)	Ftg-Tee Npt 04Pm- 04Pf- 04Pf	1
	4	17414	(000000-)	Ftg-Hyd Str Pm04/Pf02	1
	5	23156	(000000-)	Switch, Pressure, LPG	1
∇	6	59807	(000000-)	Filter, Fuelock	1
▲		65527	(000000-)	Repair Kit, Fuelock	1
	7	59809	(000000-)	Bracket, Mtg, Vaporizer	1
	8	52424	(000000-)	Ftg-Hyd E90 Pm04/Jm06	2
	9	59808	(000000-)	Fuelline,.375 Od	1
∇	10	54930	(000000-)	Vaporizer, LPG	1
▲		55998	(000000-)	Vaporizer Repair Kit Im	1
	11	07598	(000000-)	Ftg-Brs E90 Pm08/Sm08	1
	12	79422	(000000-)	Hose-Lpg Med08 Spcl S08jf/08j9	1
	13	40607	(000000-)	Ftg-Brs Str Bm03/Pm02	1
	14	07464	(000000-)	Hose, Vacuum .16 Id X 19.0 Lg	1
	15	39780-1	(000000-)	Hose Vac.,Rubber, .16Id,28.0L	1
	16	51839	(000000-)	Ftg-Brs E90 Em10/Pm06	2
	17	01997	(000000-)	Ftg-Hyd Brass Npt/Npt 06Pm/06P	1
	18	63810	(000000-)	Clamp-Wormdrive, 0.56- 1.06D	4
	19	31543	(000000-)	Hose, Heater	2
	20	30305	(000000-)	Control Assy, Ignition Vsg4113	1

Fig. 20 - Air Cleaner Group

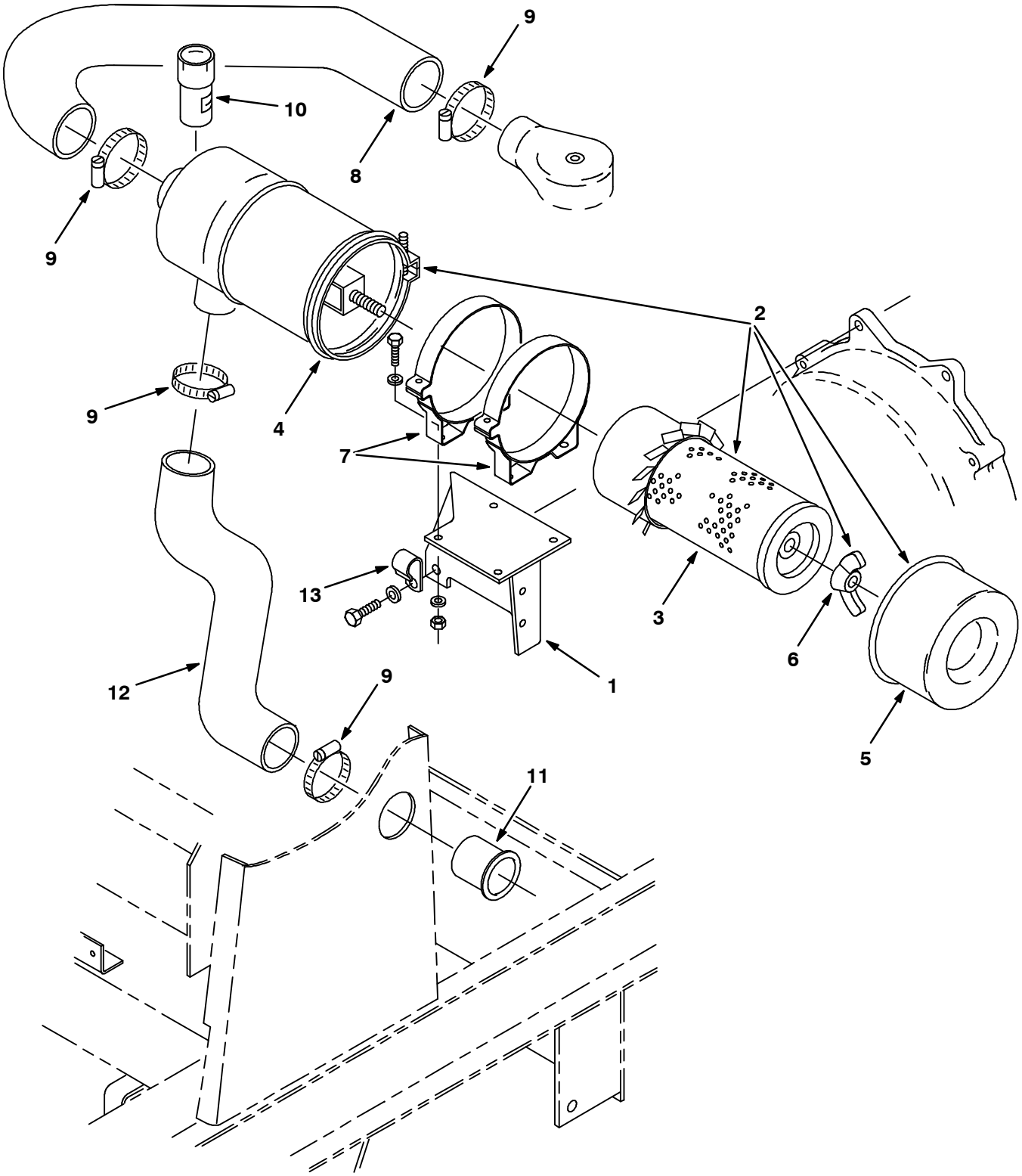

07883/07042

Fig. 20 - Air Cleaner Group

	Ref.	Tennant Part No.	Machine Serial Number	Description	Qty.
	1	53783	(000000-)	Bracket, Mtg, Air Cleaner	1
∇	2	58538	(000000-)	Air Cleaner	1
▲	3	58120	(000000-)	Element, Air Filter	1
▲	4	02740	(000000-)	Clamp Assembly Dn	1
▲	5	02741	(000000-)	Cup Assembly Dn	1
▲	6	07562	(000000-)	Nut, Wing .44-20 Special	1
	7	51560-3	(000000-)	Clamp,Mounting,Cyclopac Aircl.	2
	8	31524	(000000-)	Hose, Molded, Air Intake	1
	9	14432	(000000-)	Clamp-Wormdrive, 1.81- 2.75D	4
	10	03026	(000000-)	Indicator,Service,Air Filter	1
	11	58346	(000000-)	Tube - Carb. Air Intake	1
	12	59811	(000000-)	Tube, Inlet, A Clnr	1
	13	30407	(000000-)	Clip, Keeper, Open	1

Fig. 21 - Alternator and Engine Fan Group

Alternator mount Hardware;
35707 lower bolt (1)
59156 lower nyloc nut (1)
16931 upper bolt (1)
32491 upper washer (1)

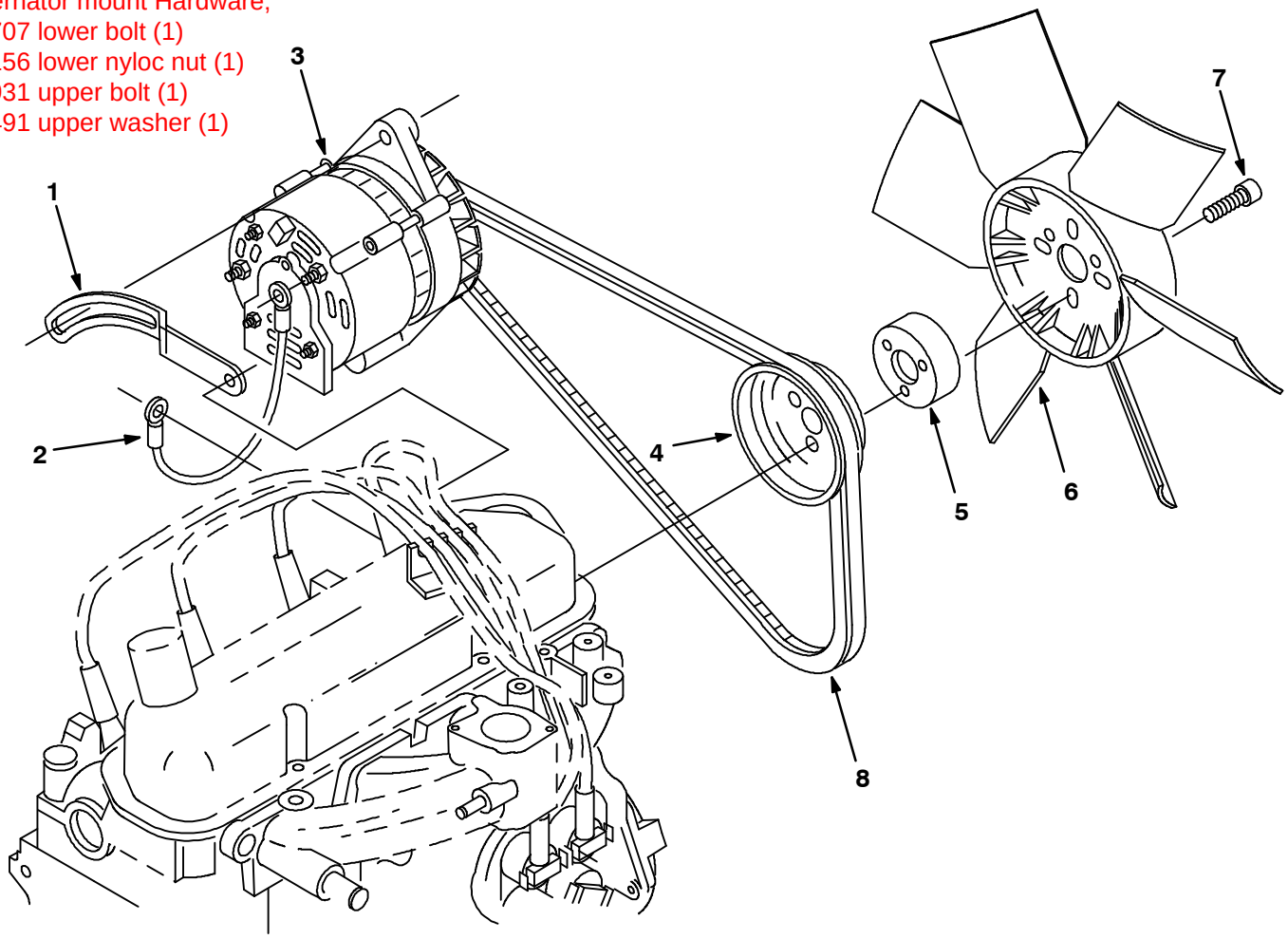

07828/07072

	Ref.	Tennant Part No.	Machine Serial Number	Description	Qty.
	1	31526	(000000-)	Arm, Alternator	1
	2	82731	(000000-)	Wire-Ground, Alternator	1
∇	3	60559	(000000-)	Alternator, 50A/12V Mando	1
▲		61931	(000000-)	Regulator Assy Md	1
▲		86041	(000000-)	Bearing-Ball, .669B 1.575D 0.472W	1
▲		61529	(000000-)	Cplt Brush Kit Md	1
▲		61531	(000000-)	Rectifier Assy Md	1
▲		70160	(000000-)	Altrntr Pulley Md	1
	4	30553	(000000-)	Sheave, Water Pump, 1Gr 4.25Od	1
	5	30570	(000000-)	Spacer, Fan .88	1
	6	30559	(000000-)	Fan, Pusher	1
	7	57813	(000000-)	Scr-Soc M 6X1.0 35 Nylonloc	3
	8	58323	(000000-004025)	Belt, V Hc41 X 33	1
	8	374516	(004026-)	Belt, V Hc41 X 32.5	1

Fig. 22 - Muffler Group

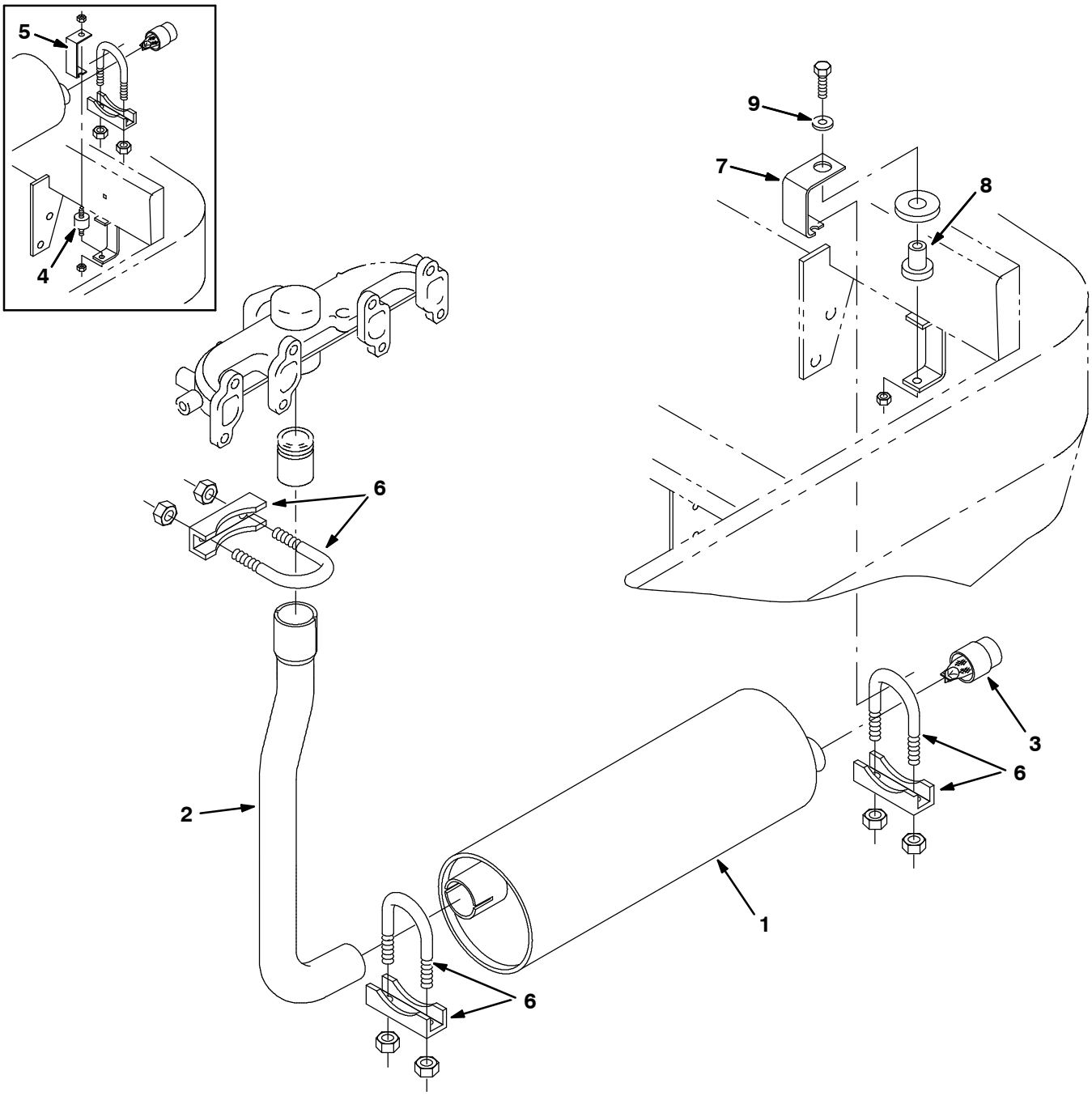

07830/07074

Ref.	Tennant Part No.	Machine Serial Number	Description	Qty.
1	55851	(000000-)	Muffler, Exhaust	1
2	55861	(000000-)	Tube, Exhaust	1
3	58193	(000000-)	Screen, Spark-Arresting	1
4	82661	(000000-003142)	Isolator-Vibration .25-20	1
5	84578	(000000-003142)	Replm Kit, Muff Hanger F/82545	1
6	24012	(000000-)	Clamp-Muffler,For 1.62 Od Tube	3
7	70214	(003143-)	Bracket, Hanger, Muffler	1
8	54274	(003143-)	Isolator-Vibration, 125lb. Rating	1
9	30013	(003143-)	Washer-Flt .31 Fender Pltd	1

Fig. 23 - Fuel Tank Group, Gasoline

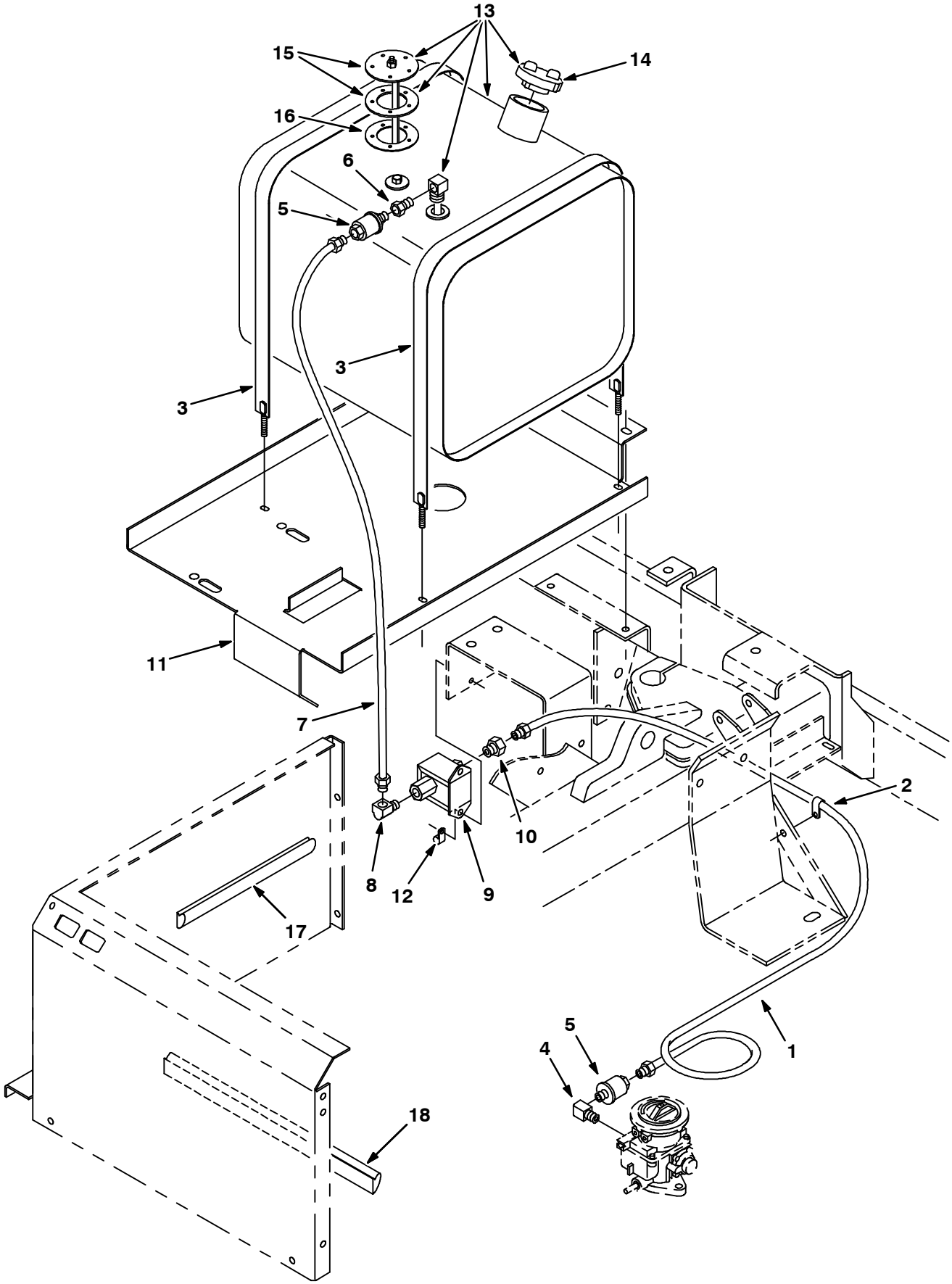

07827/07071

Fig. 23 - Fuel Tank Group, Gasoline

	Ref.	Tennant Part No.	Machine Serial Number	Description	Qty.
	1	59888	(000000-001722)	Fuelline, .312 Od	1
	2	76736	(000000-001722)	Clamp-Cable, 0.38Dia 0.62Wth	1
	3	87396	(000000-001722)	Strap, Tank, Gas	2
	4	11984	(000000-001722)	Ftg-El90 Npt/Npt 02Pf-02Pm	1
	5	36050	(000000-001722)	Filter, Fuel	2
	6	17414	(000000-001722)	Ftg-Hyd Str Pm04/Pf02	1
	7	59887	(000000-001722)	Fuelline, .312 Od	1
	8	15555-1	(000000-001722)	Ftg-Brs E90 If05/Pm02	1
	9	59945	(000000-001722)	Pump, Fuel, Ele	1
	10	40585	(000000-001722)	Ftg-Brs Str If05/Pm02	1
	11	55222	(000000-001722)	Tray, Gas	1
	12	46236	(000000-001722)	Clamp-Cable, 0.25Dia 0.56Wth	1
∇	13	74453	(000000-001722)	Tank Repl. Kit, Fuel, 9.4 Gal	1
▲	14	48267	(000000-001722)	Cap, Gas	1
▲∇	15	07873	(000000-001722)	Send Unit	1
▲▲	16	14131	(000000-001722)	Gasket, 2.7D 1.5B.12T 5/ 2.1Bc	1
	17	86330	(000000-001722)	Duct, Vinyl, 10.0 In	1
	18	86331	(000000-001722)	Duct, Vinyl, 16.0 In	1

Fig. 24 - Fuel Tank Group, Gasoline

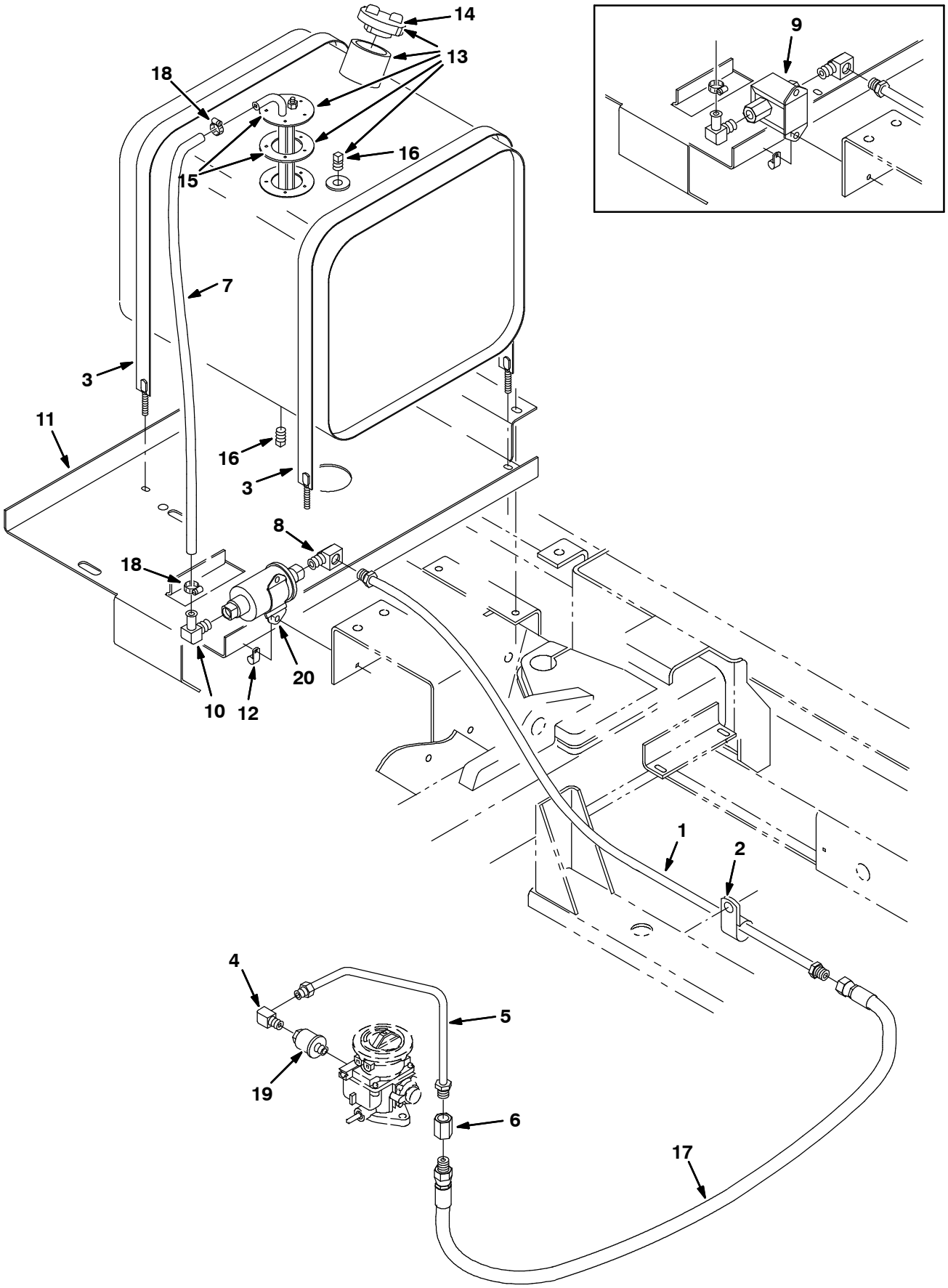

09835/07071

Fig. 24 - Fuel Tank Group, Gasoline

	Ref.	Tennant Part No.	Machine Serial Number	Description	Qty.
	1	72192	(001723-)	Fuelline	1
	2	76736	(001723-)	Clamp-Cable, 0.38Dia 0.62Wth	1
	3	87396	(001723-)	Strap, Tank, Gas	2
	4	11984	(001723-)	Ftg-E90 Npt/Npt 02Pf-02Pm	1
	5	72158	(001723-)	Fuelline	2
	6	25610	(001723-)	Ftg-Brs Str	1
	7	82509	(001723-)	Hose, Fuelline	1
	8	15555-1	(001723-)	Ftg-Brs E90 If05/Pm02	1
	9	21720	(001723-003646)	Replm Kit, Fuel Pump F/59945	1
	10	53029	(001723-)	Ftg-Brs E90	1
	11	55222	(001723-)	Tray, Gas	1
	12	46236	(001723-)	Clamp-Cable, 0.25Dia 0.56Wth	1
∇	13	72191	(001723-)	Tank, Fuel, 9.4 Gal	1
▲	14	48267	(001723-)	Cap, Gas	1
▲	15	74406	(001723-)	Send Unit	1
▲	16	48126	(001723-)	Ftg-Plug Npt 02Pm Sq Hd	2
	17	70173	(001723-)	Hose, Fuelline	1
	18	43844	(001723-)	Clamp-Wormdrive, 0.25-0.62 D	2
	19	36050	(001723-)	Filter, Fuel	1
	20	59015	(003647-)	Pump, Fuel	1

Fig. 25 - Fuel Tank Group, LPG

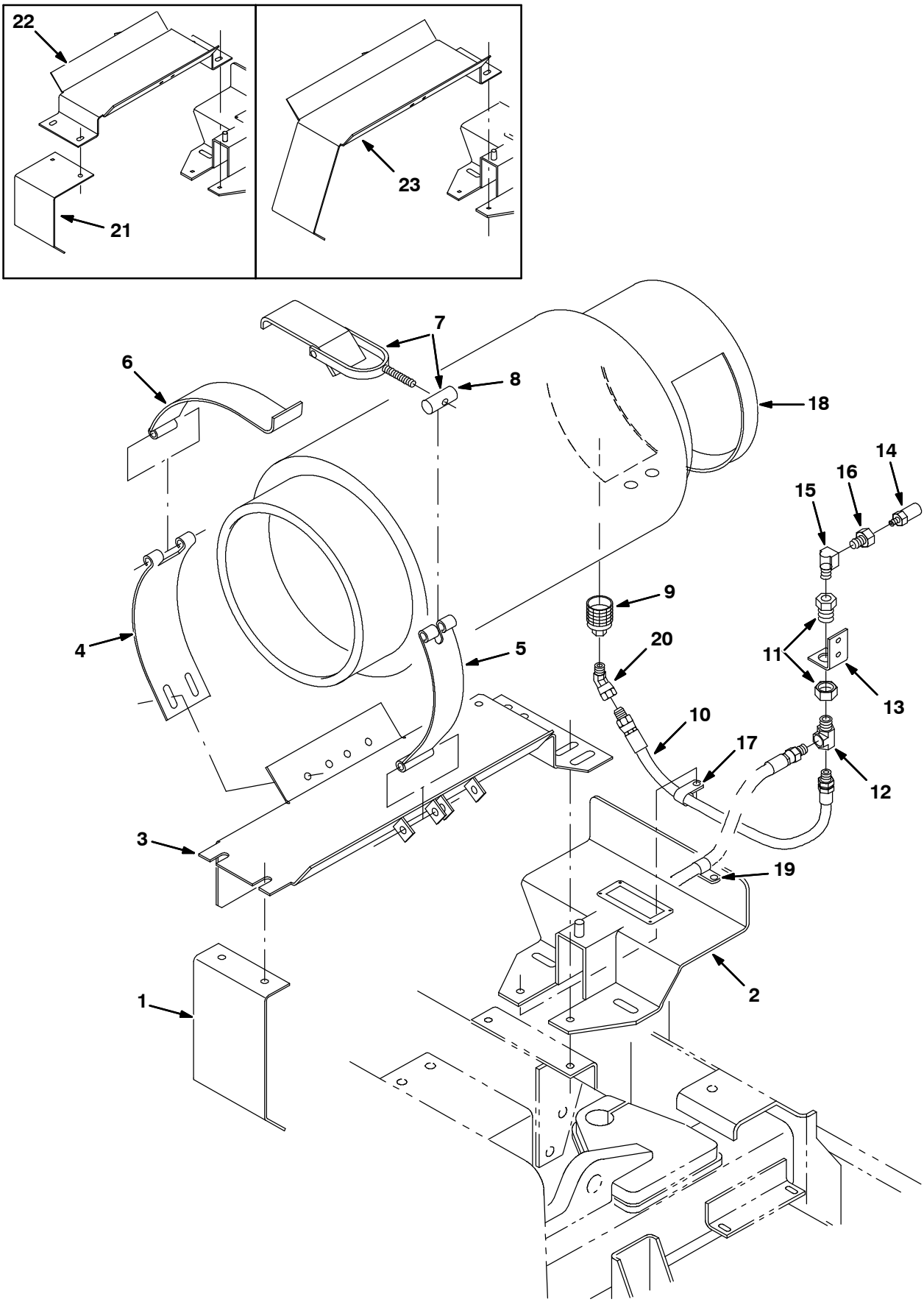

07833/07077

Fig. 25 - Fuel Tank Group, LPG

	Ref.	Tennant Part No.	Machine Serial Number	Description	Qty.
	1	70221	(003321-)	Bracket, Mtg, LPG	1
	2	72128	(000000-)	Bracket Wldt, LPG w/label	1
	3	10652	(003321-)	Panel Wldt	1
	4	58589	(000000-)	Strap, Mtg.- Lp Tank	1
	5	58590	(000000-)	Strap, Tank Retainer - Lp	1
	6	57297	(000000-)	Strap, Hinge - Lp Tank Mtg	1
∇	7	53400-1	(000000-)	Latch Assy, LPG Tank Mtg,W/Nut	1
▲	8	53400-4	(000000-)	Nut, Adjustable, LPG Tank Mtg	1
	9	26496	(000000-)	Coupling,Quickdisc,, Shwd	1
	10	22308-3	(000000-)	Hose, Lpg, 4Lpg X 35.0Lg	1
	11	78122	(000000-)	Ftg,Bulkhead .25Npt Wh W21204	1
	12	56976A	(000000-)	Ftg-Tee Npt 04Pm- 04Pf- 04Pf	1
	13	54343	(000000-)	Bracket, Mtg, Relief Valve	1
	14	24047	(000000-)	Valve, Press Relief, LPG Rego	1
	15	27048	(000000-)	Ftg-El90 Npt/Npt 04Pf/04Pm	1
	16	59892	(000000-)	Ftg-Str Npt/Npt 04Pf-04Pm	1
	17	26395-1	(000000-)	Clamp-Cable, 0.56Dia 0.38Wth	1
	18	24928-1	(000000-)	Tank-Lp,33#,Liq,Both,Fill Ga L	1
	19	67767	(000000-)	Clamp-Cable, 0.69Dia 0.62Wth	1
	20	47720	(000000-)	Ftg-Hyd E45 PM04/PF04	1
	21	54088	(000000-xxxxxx)	Bracket, Mtg, LPG (Repl. By 72127)	1
	22	58588	(000000-xxxxxx)	Cradle-Lp Tank Weldmt	1
	23	72127	(xxxxxx-003320)	Panel Wldt (Rep. By 84586)	1

Fig. 26 - Radiator Group

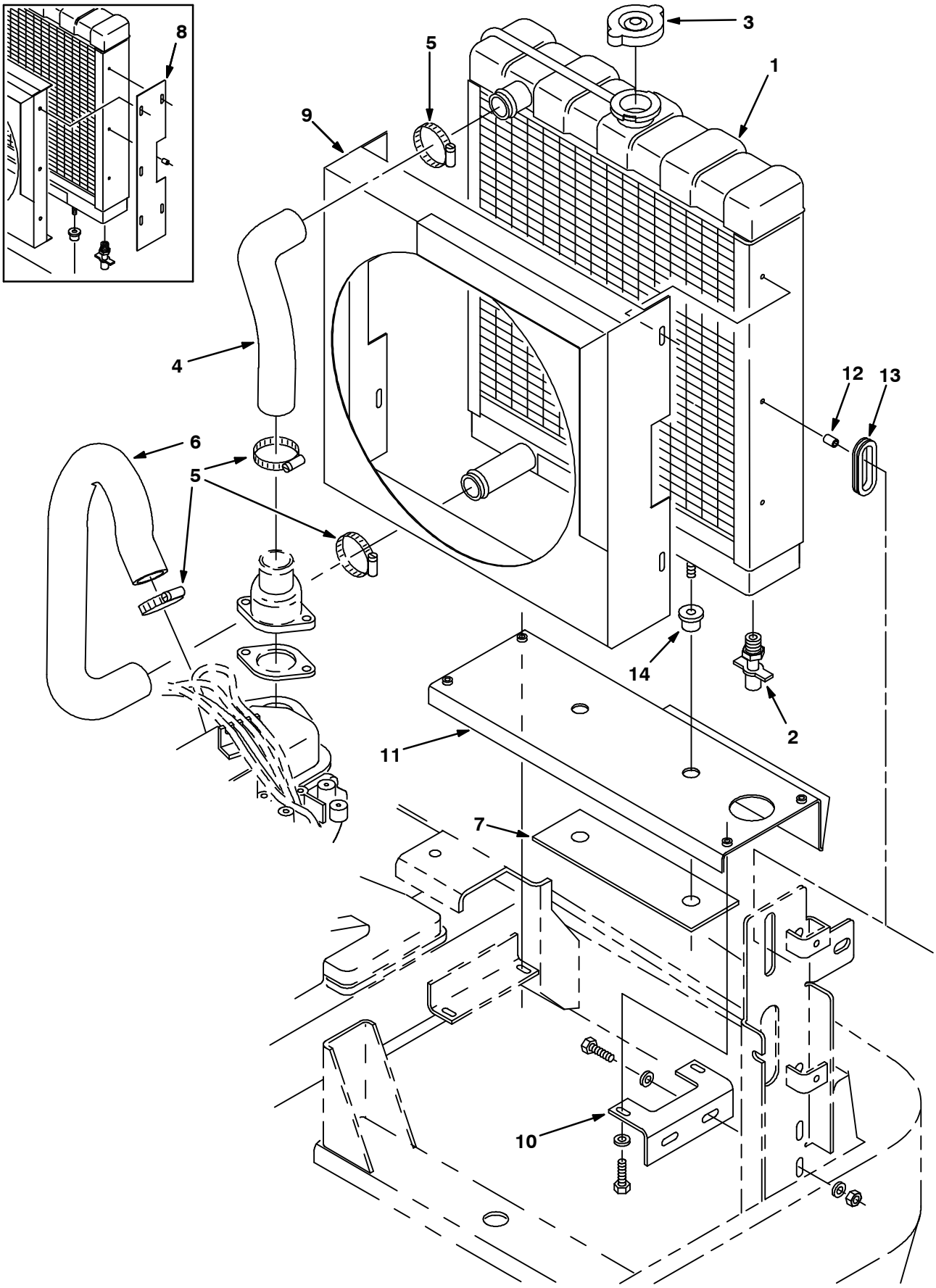

07886/07046

Fig. 26 - Radiator Group

Ref.	Tennant Part No.	Machine Serial Number	Description	Qty.
1	55225	(000000-)	Radiator	1
2	54911-32	(000000-)	Draincock,End.Block	1
3	31755	(000000-)	Cap, Radiator	1
4	31517	(000000-)	Hose, Radiator, Upper	1
5	11531	(000000-)	Clamp-Wormdrive, 1.06- 2.00D	4
6	31518	(000000-)	Hose, Radiator	1
7	59551	(000000-)	Plate, Filler	1
8	59555	(000000-xxxxxx)	Plate, Sppt, Shroud	2
9	74394	(000000-)	Guard, Fan, W/Label, Gas	1
10	72147	(000000-)	Bracket, Radiator Mount	1
11	59550	(000000-)	Channel, Mtg, Radiator	1
12	59881	(000000-)	Spacer	1
13	10632-13	(000000-)	Grommet,Rbr,1.50Id,For .19Matl	1
14	54274	(000000-)	Isolator-Vibration,60 Lb.Ratng	2

Fig. 27 - Battery Group, Gasoline

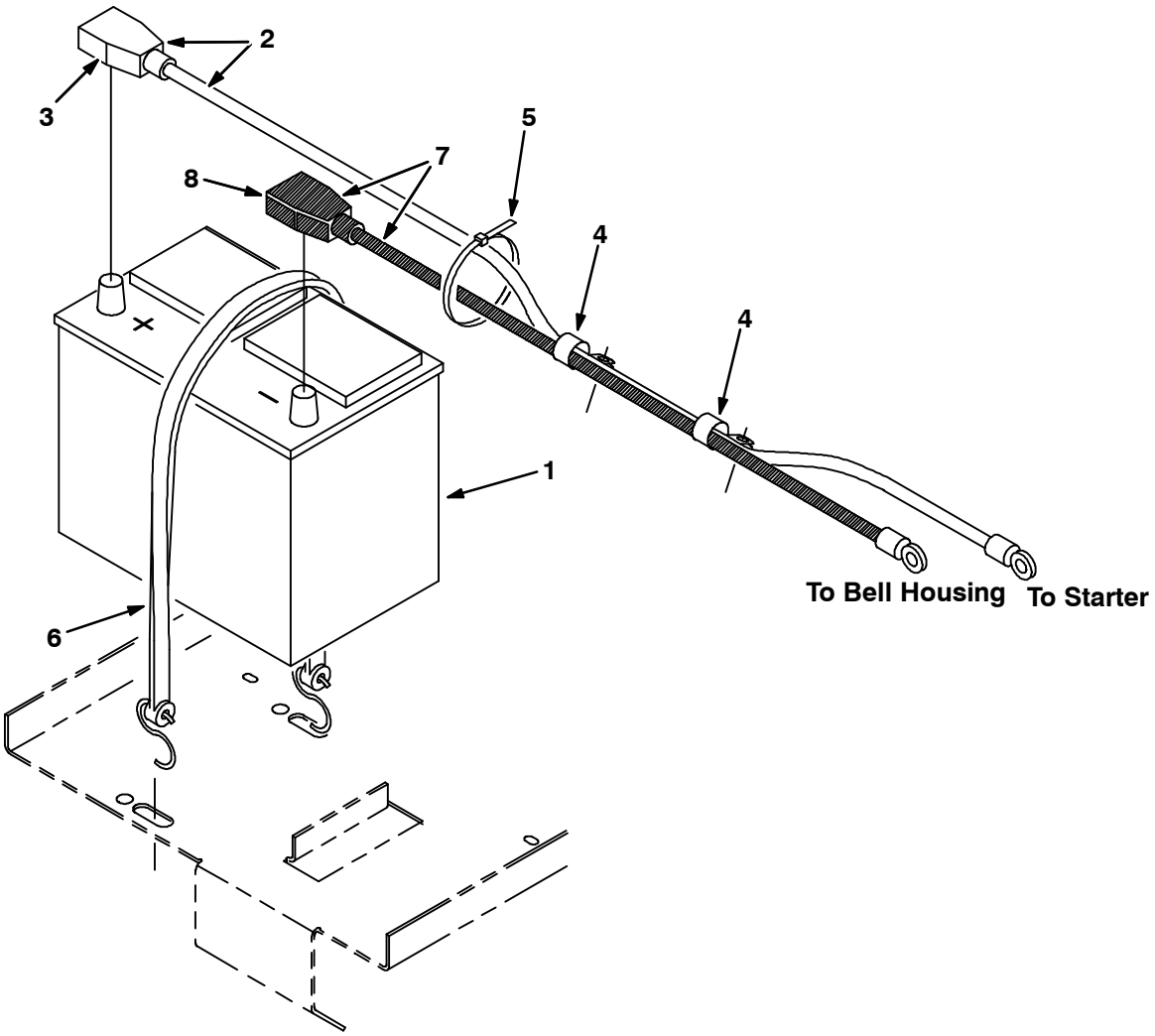

07836/07080

	Ref.	Tennant Part No.	Machine Serial Number	Description	Qty.
	1	10137	(000000-)	Battery, 12V, Cc Amps:475 Wet	1
▽	2	60292	(000000-)	Wire Assy, 66.0 Lg, 2 Ga, Pos	1
▲	3	68873	(000000-)	Boot, Batt. Term. 1-2 Ga Red	1
	4	67767	(000000-)	Clamp-Cable, .69Dia. .62Wth	2
	5	49266	(000000-)	Tie, Cable 1.75D Max 7.50Lg	2
	6	33671	(000000-)	Strap,Rubber Tie-Down	1
▽	7	60293	(000000-)	Wire Assy, 42.0 Lg, 2 Ga, Neg	1
▲	8	68872	(000000-)	Boot, Batt. Term. 1-2 Ga Black	1

Fig. 28 - Battery Group, LPG

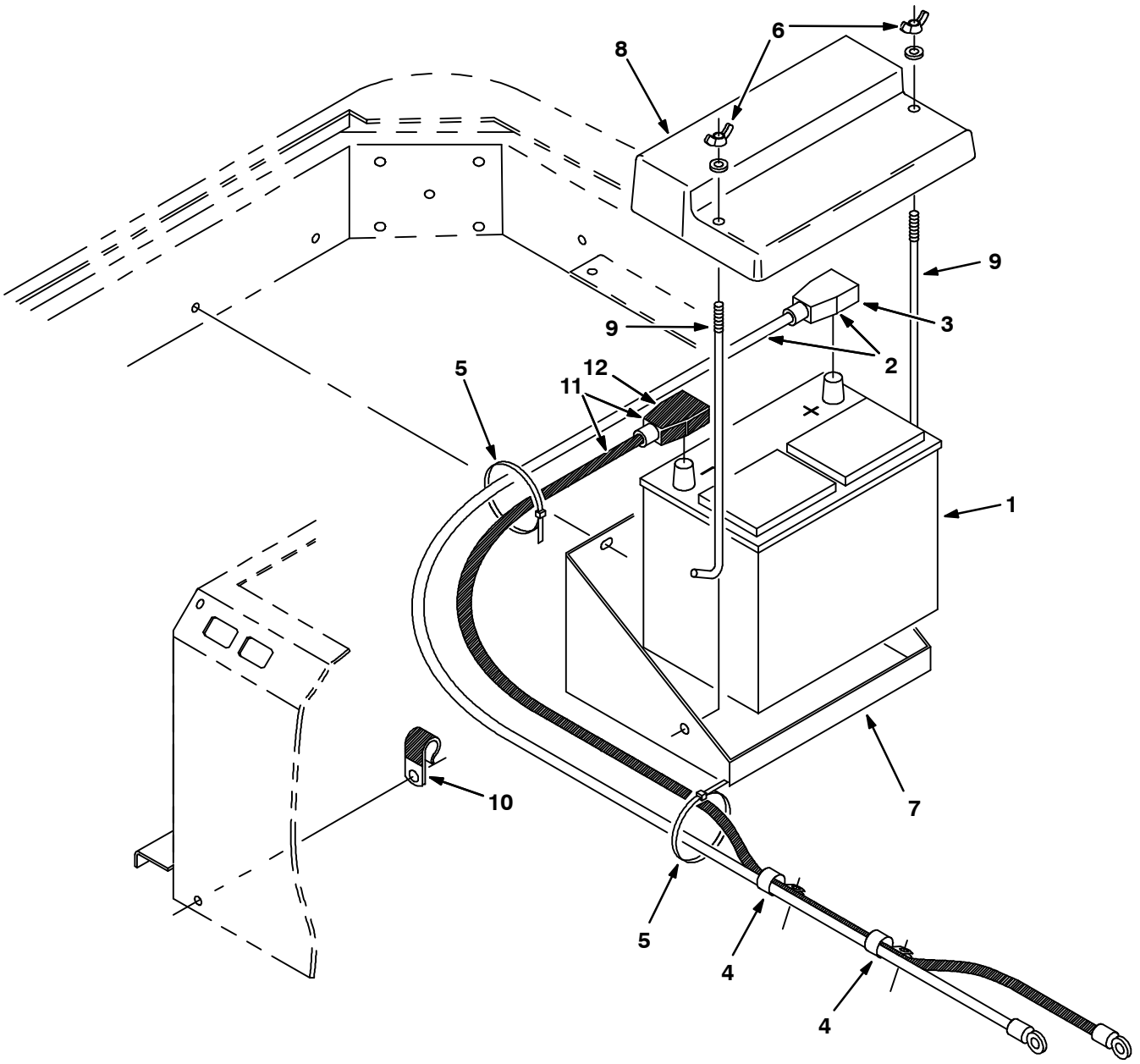

07835/07079

	Ref.	Tennant Part No.	Machine Serial Number	Description	Qty.
	1	10137	(000000-)	Battery, 12V, Cc Amps:475 Wet	1
∇	2	60294	(000000-)	Wire Assy, 78.0 Lg, 2 Ga, Pos	1
▲	3	68873	(000000-)	Boot, Batt. Term. 1-2 Ga Red	1
	4	67767	(000000-)	Clamp-Cable, .69Dia. .62Wth	2
	5	49266	(000000-)	Tie, Cable 1.75D Max 7.50Lg	2
	6	39272	(000000-)	Nut, Wing	2
	7	71038	(000000-)	Tray, Battery, LPG	1
	8	71021	(000000-)	Cover, Battery, LPG	1
	9	13015	(000000-)	Bolt, Hold-Down	2
	10	30407	(000000-)	Clip, Keeper, Open	1
∇	11	60295	(000000-)	Wire Assy, 60.0 Lg, 2 Ga, Neg	1
▲	12	68872	(000000-)	Boot, Batt. Term. 1-2 Ga Black	1

Fig. 29 - Radiator Group

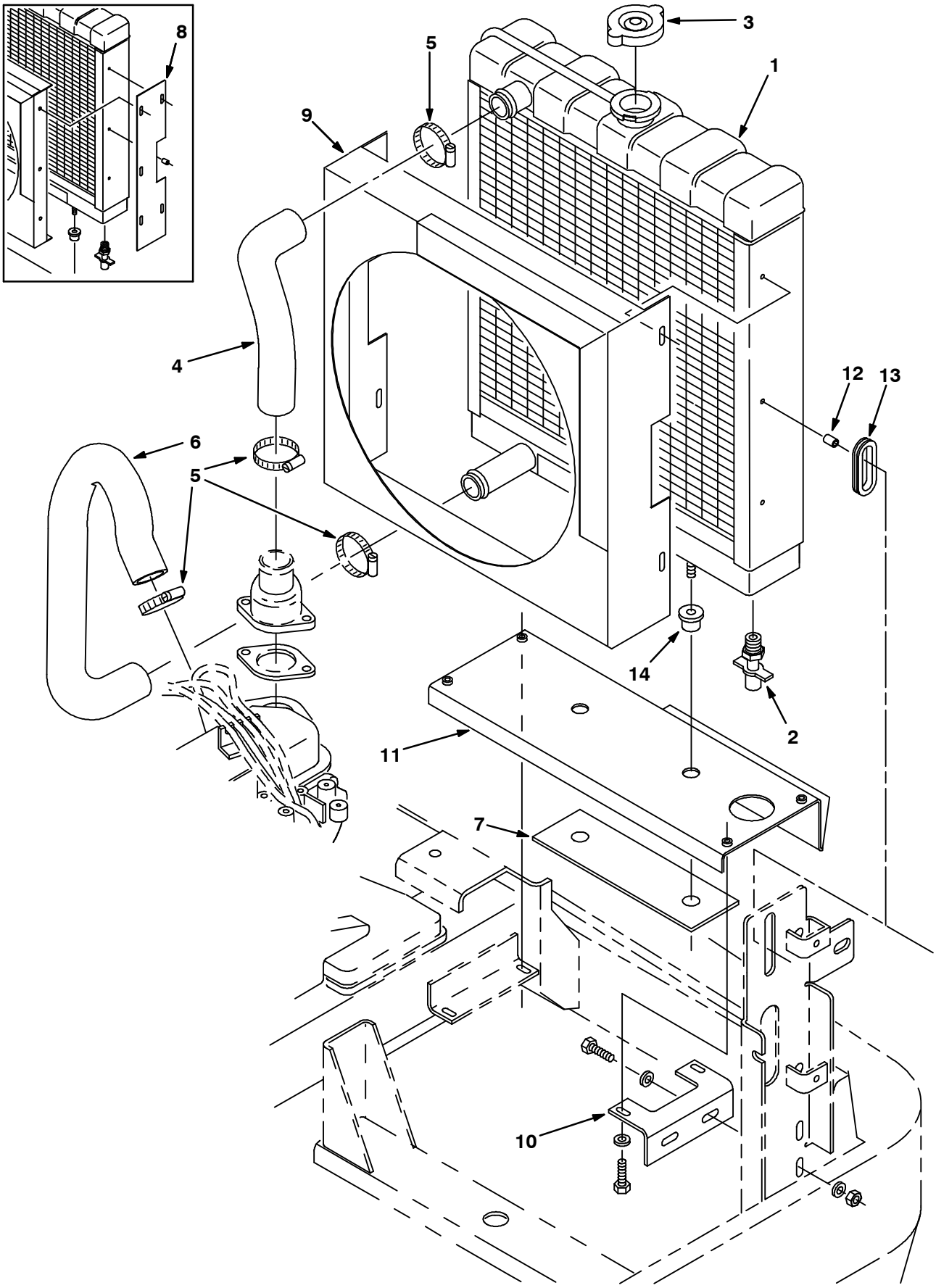

07886/07046

Fig. 29 - Radiator Group

Ref.	Tennant Part No.	Machine Serial Number	Description	Qty.
1	55225	(000000-)	Radiator	1
2	54911-32	(000000-)	Draincock,End.Block	1
3	31755	(000000-)	Cap, Radiator	1
4	31517	(000000-)	Hose, Radiator, Upper	1
5	11531	(000000-)	Clamp-Wormdrive, 1.06- 2.00D	4
6	31518	(000000-)	Hose, Radiator	1
7	59551	(000000-)	Plate, Filler	1
8	59555	(000000-xxxxxx)	Plate, Sppt, Shroud	2
9	74394	(000000-)	Guard, Fan, W/Label, Gas	1
10	72147	(000000-)	Bracket, Radiator Mount	1
11	59550	(000000-)	Channel, Mtg, Radiator	1
12	59881	(000000-)	Spacer	1
13	10632-13	(000000-)	Grommet,Rbr,1.50Id,For .19Matl	1
14	54274	(000000-)	Isolator-Vibration,60 Lb.Ratng	2

Fig. 30 - Battery Group, Gasoline

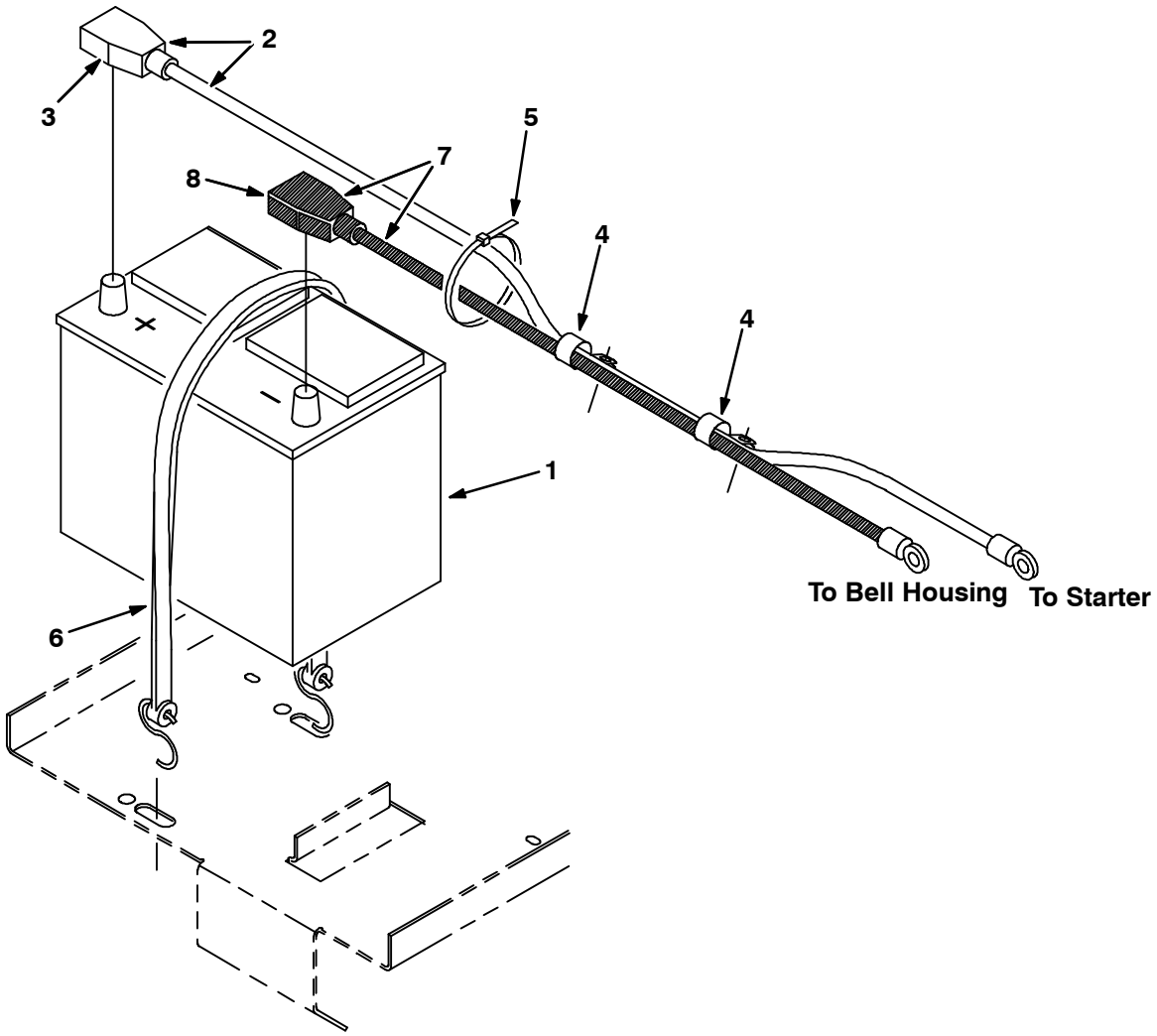

07836/07080

	Ref.	Tennant Part No.	Machine Serial Number	Description	Qty.
	1	10137	(000000-)	Battery, 12V, Cc Amps:475 Wet	1
▽	2	60292	(000000-)	Wire Assy, 66.0 Lg, 2 Ga, Pos	1
▲	3	68873	(000000-)	Boot, Batt. Term. 1-2 Ga Red	1
	4	67767	(000000-)	Clamp-Cable, .69Dia. .62Wth	2
	5	49266	(000000-)	Tie, Cable 1.75D Max 7.50Lg	2
	6	33671	(000000-)	Strap,Rubber Tie-Down	1
▽	7	60293	(000000-)	Wire Assy, 42.0 Lg, 2 Ga, Neg	1
▲	8	68872	(000000-)	Boot, Batt. Term. 1-2 Ga Black	1

Fig. 31 - Battery Group, LPG

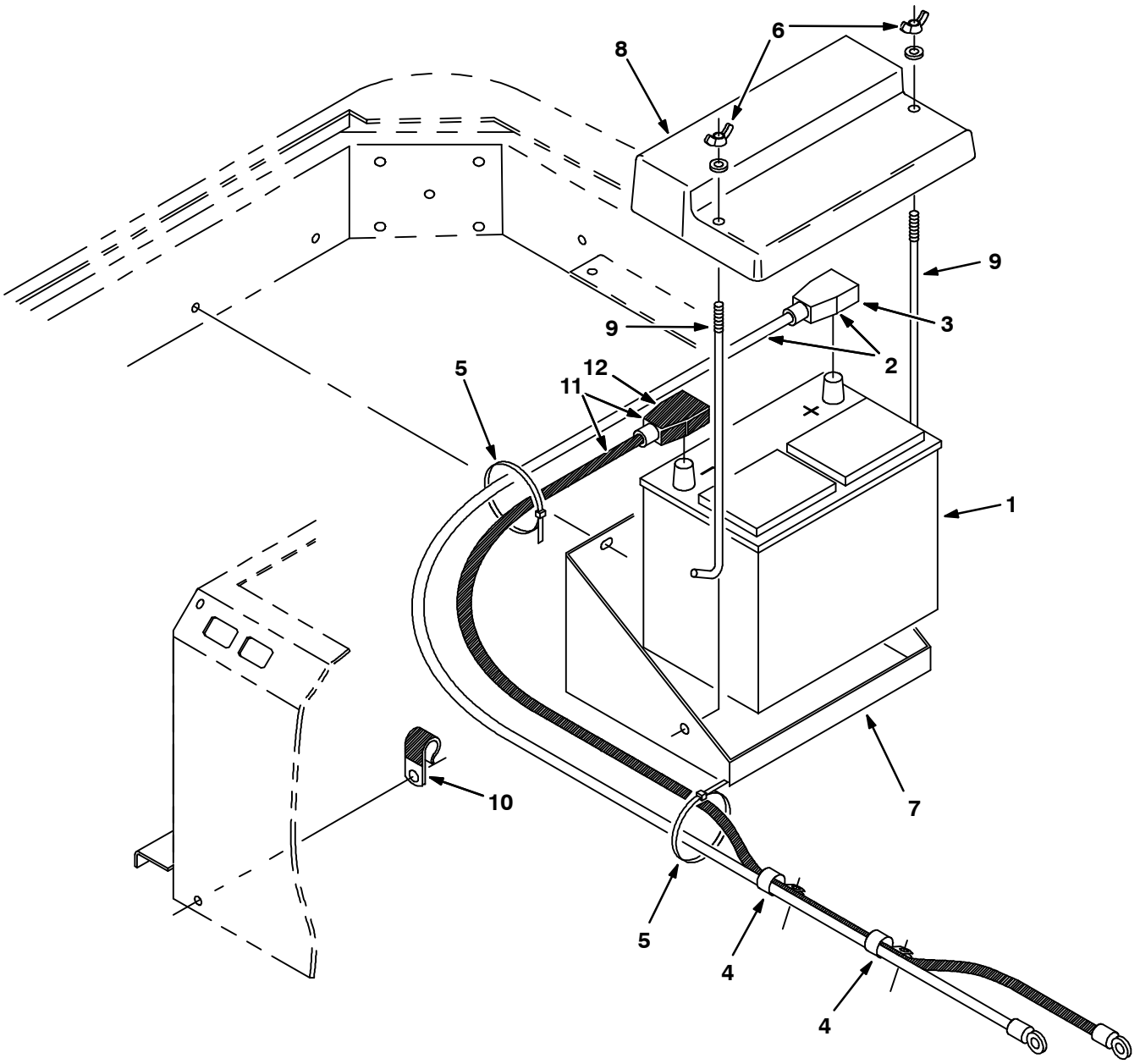

07835/07079

	Ref.	Tennant Part No.	Machine Serial Number	Description	Qty.
	1	10137	(000000-)	Battery, 12V, Cc Amps:475 Wet	1
∇	2	60294	(000000-)	Wire Assy, 78.0 Lg, 2 Ga, Pos	1
▲	3	68873	(000000-)	Boot, Batt. Term. 1-2 Ga Red	1
	4	67767	(000000-)	Clamp-Cable, .69Dia. .62Wth	2
	5	49266	(000000-)	Tie, Cable 1.75D Max 7.50Lg	2
	6	39272	(000000-)	Nut, Wing	2
	7	71038	(000000-)	Tray, Battery, LPG	1
	8	71021	(000000-)	Cover, Battery, LPG	1
	9	13015	(000000-)	Bolt, Hold-Down	2
	10	30407	(000000-)	Clip, Keeper, Open	1
∇	11	60295	(000000-)	Wire Assy, 60.0 Lg, 2 Ga, Neg	1
▲	12	68872	(000000-)	Boot, Batt. Term. 1-2 Ga Black	1

Fig. 32 - Rear Drive Wheel Group

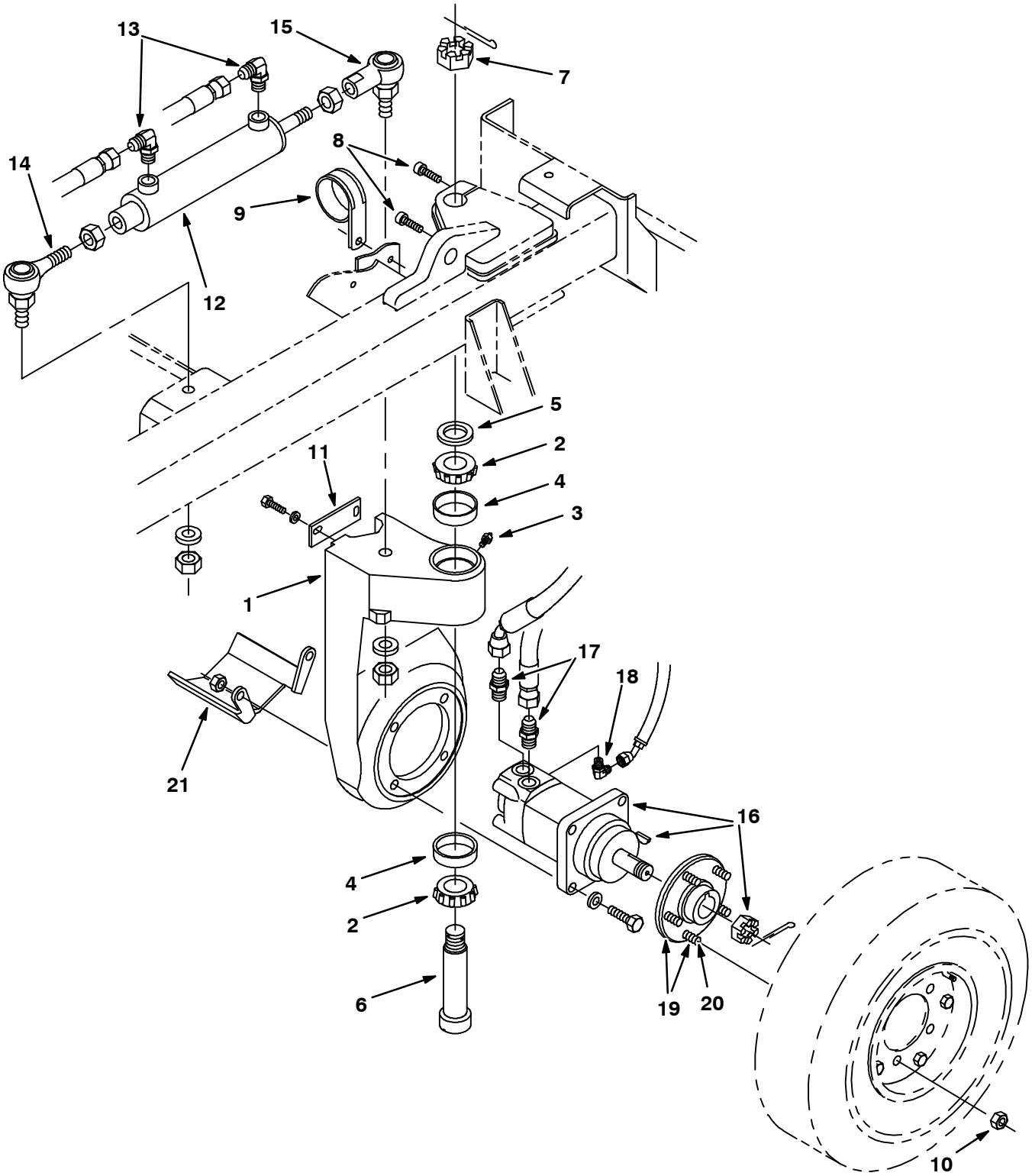

07898/07058

Fig. 32 - Rear Drive Wheel Group

	Ref.	Tennant Part No.	Machine Serial Number	Description	Qty.
	1	53612	(000000-)	Housing, Sppt, Wheel	1
	2	51339	(000000-)	Bearing-Cone, 1.38Bore 0.71Wth	2
	3	47801	(000000-)	Ftg, Grease.25-28Th Strt .63L	1
	4	51338	(000000-)	Bearing-Cup , 2.56Dia 0.55Wth	2
	5	54051	(000000-)	Washer, Thrust	1
	6	54053	(000000-)	Pin, Wheel Support, Rear	1
	7	54052	(000000-)	Nut-Hxslot 1.12-18 Pltd	1
	8	39310	(000000-)	Scr Soc M10X1.5 40	2
	9	70157	(000000-)	Clamp-Cable, 2.50Dia 1.00Wth Ss	1
	10	24339	(000000-)	Nut-Wheel .50-20 60 Angle	5
	11	58842	(000000-)	Plate - Hose Support	1
	12	53601	(000000-)	Cylinder-Hyd (See Breakdowns)	1
	13	56820	(000000-)	Ftg-Hyd E90 Jm06/Om06	2
	14	63688	(000000-)	Balljoint, Rod End	1
	15	63689	(000000-)	Balljoint, Rod End	1
	16	59802	(000000-002100)	Motor-Hyd Gear (See Breakdowns)	1
	16	02641	(002101-)	Motor-Hyd Gear (See Breakdowns)	1
	17	46480	(000000-)	Ftg-Hyd Str Jm10/Om10	2
	18	77097	(000000-)	Ftg-Hyd E90 Jm04/Om04	1
∇	19	82239	(000000-)	Hub & Stud Assy	1
▲	20	32126	(000000-)	Stud, Wheel .50-20 x 1.50	5
	21	72155	(000000-)	Bracket, Drive Motor	1

Fig. 33 - Rear Wheel Assembly

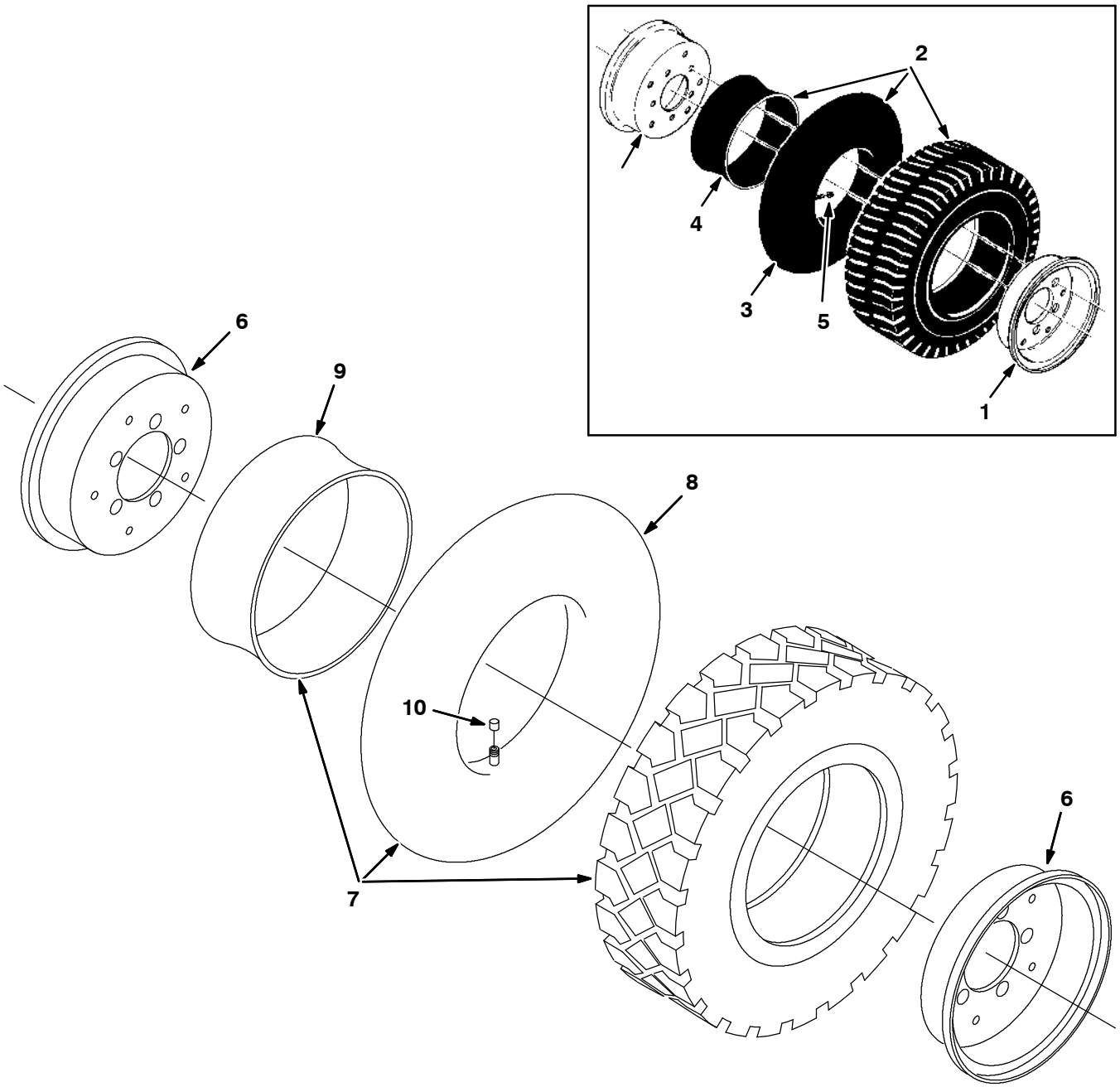

10931/10932,02588

Fig. 33 - Rear Wheel Assembly

	Ref.	Tennant Part No.	Machine Serial Number	Description	Qty.
∇		53640	(000000-003050)	Tire and Wheel Assembly (Repl. By 70287)	1
▲	1	53818	(000000-003050)	Rim Assembly	1
▲∇	2	53819	(000000-003050)	Tire, Tube and Flap Assembly	1
▲▲	3	53819-1	(000000-003050)	Tube, Tire (Repl. By 70280)	1
▲▲	4	53819-2	(000000-003050)	Flap, Tube	1
▲	5	45786	(000000-003050)	Cap, Valve Stem	1
∇		70287	(003051-)	Tire & Rim Assy, 5.70/5.00R-8	1
▲	6	53818	(003051-)	Rim Assembly	1
▲∇	7	53819	(003051-)	Tire, Tube and Flap Assembly	1
▲▲	8	70280	(003051-)	Tube, Inner -5.00R-8, Js2 Valve	1
▲▲	9	53819-2	(003051-)	Flap, Tube	1
▲	10	45786	(003051-)	Cap, Valve Stem	1

Fig. 34 - Front Wheel and Brakes Group

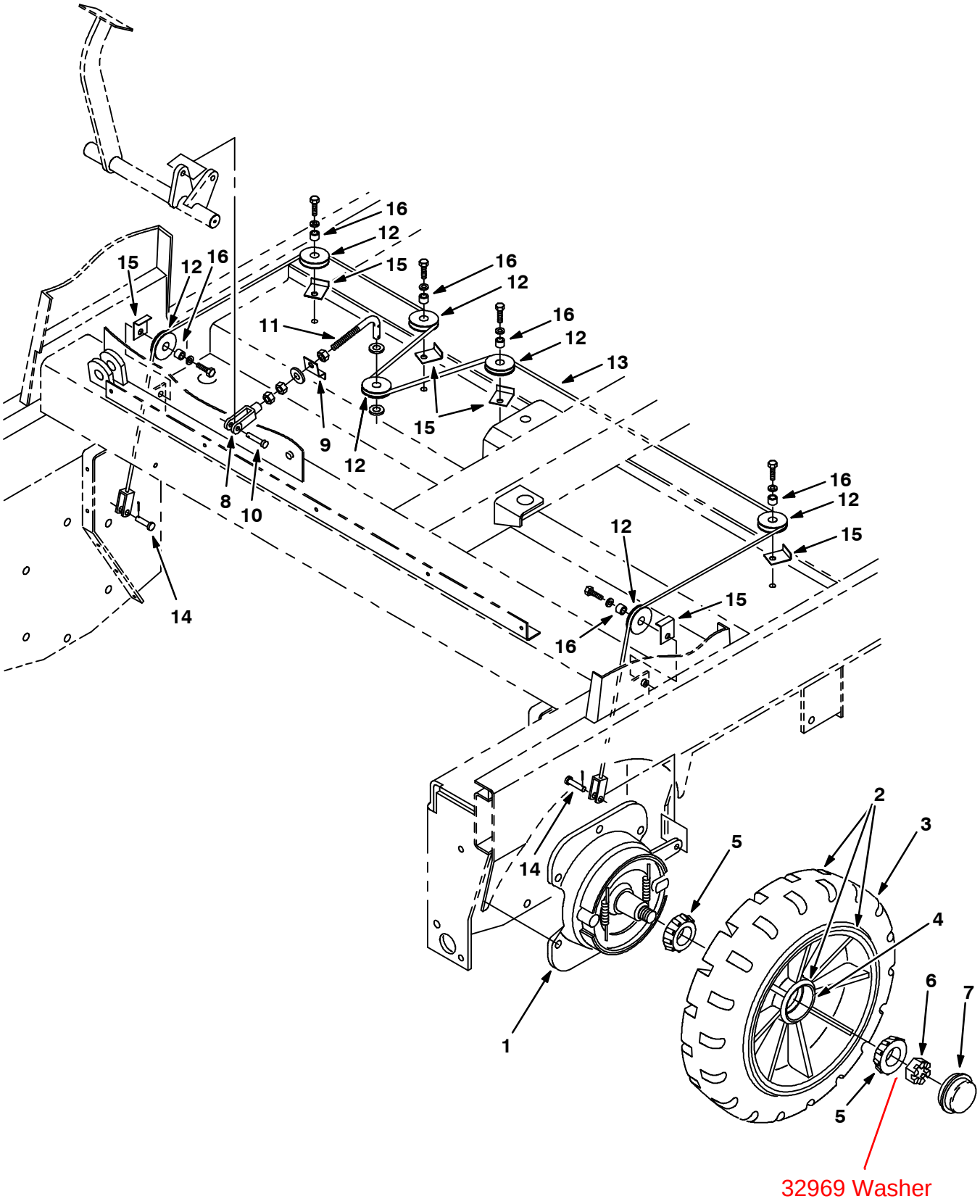

07888/07048

Fig. 34 - Front Wheel and Brakes Group

	Ref.	Tennant Part No.	Machine Serial Number	Description	Qty.
∇	1	54577	(000000-)	Brake Assy	2
▲		66211	(000000-)	Brake Shoes	2
▲∇		66213	(000000-)	Brake Repair Kit	1
▲▲		70161	(000000-)	Chrome Pltd Cam Shft	1
▲		70158	(000000-)	Return Spring-Brakes	2
∇	2	54437	(000000-)	Wheel Assy	2
▲	3	54567	(000000-)	Tire,18X5X12.12 Solid	1
▲	4	51338	(000000-)	Bearing-Cup , 2.56Dia 0.55Wth	2
	5	51339	(000000-)	Bearing-Cone, 1.38Bore 0.71Wth	4
	6	14242	(000000-)	Nut-Hxslot 1.00-20 Pltd	2
	7	54390	(000000-)	Cap, Hub	2
	8	54467	(000000-)	Clevis, Adjustable	1
	9	58288	(000000-)	Clip, Cable	1
	10	86240	(000000-)	Pin Clevis .375 Dia X 1.13 Lg	1
	11	54619	(000000-)	Rod, Brake	1
	12	74391	(000000-)	Pulley Assy - Cable, 1.5 Dia	7
	13	54617	(000000-)	Cable, Brake, Service	1
	14	09088	(000000-)	Pin,Clevis,0.37 Dia.X 1.00 Lg	2
	15	54400	(000000-)	Angle, Cable Keeper	6
	16	56624	(000000-)	Spacer, Pulley	6

Fig. 35 - Brake Lever and Pedal Group

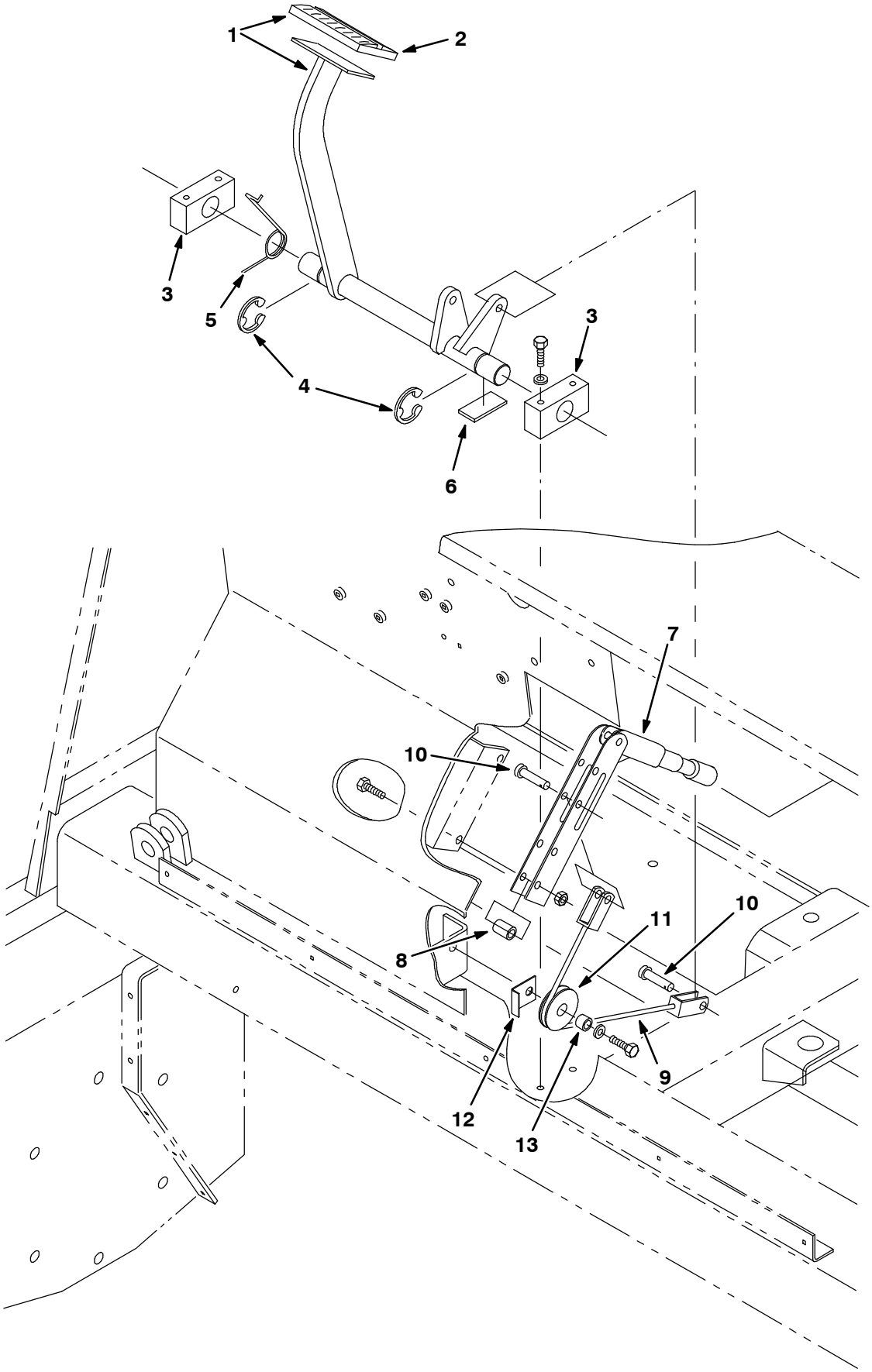

07849/07093

Fig. 35 - Brake Lever and Pedal Group

	Ref.	Tennant Part No.	Machine Serial Number	Description	Qty.
∇	1	72132	(000000-)	Shaft Wldt, Brake w/pad	1
▲	2	51109	(000000-)	Pad	1
	3	86751	(000000-)	Brg, Brake	2
	4	23788	(000000-)	Ring-Retain, Ex, 0.98OD, E-Ring	2
	5	54607	(000000-)	Spring, Torsion	1
	6	69933	(000000-)	Pad, Rubber	1
	7	51545	(000000-)	Lever, Brake	1
	8	51562	(000000-)	Sleeve, .344B .50D .81 Cr.Anc	2
	9	54616	(000000-)	Cable, Parking Brake	1
	10	86240	(000000-)	Pin Clevis .375 Dia X 1.13 Lg	2
	11	74391	(000000-)	Pulley Assy - Cable, 1.5 Dia	1
	12	54400	(000000-)	Angle, Cable Keeper	1
	13	56624	(000000-)	Spacer, Pulley	1

Fig. 36 - Directional Pedal Group

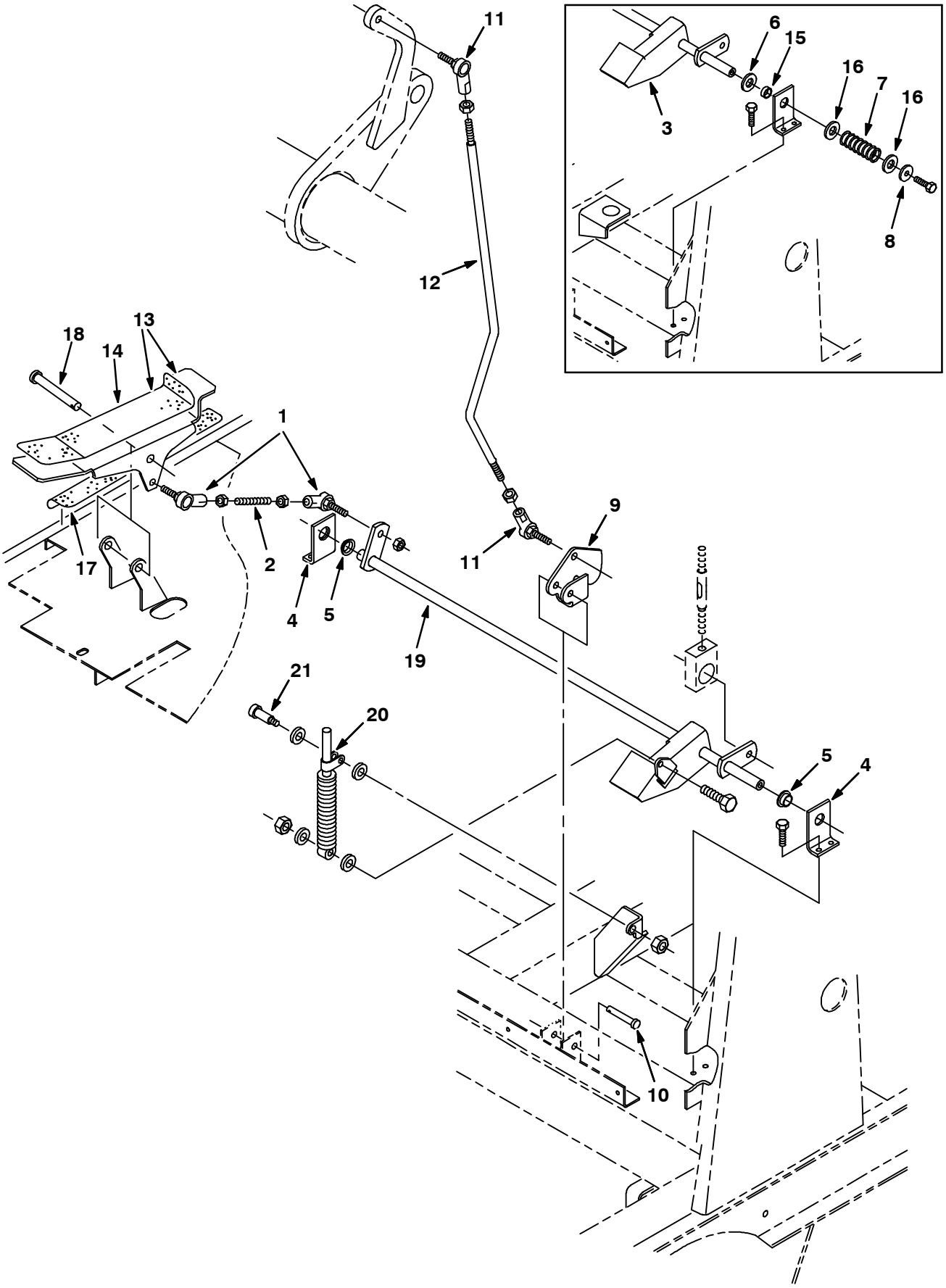

07896/07056

Fig. 36 - Directional Pedal Group

	Ref.	Tennant Part No.	Machine Serial Number	Description	Qty.
	1	05686	(000000-)	Rod-End M10X1.5 W/Stud	2
	2	54996	(000000-)	Rod, Adjusting	1
	3	54800	(000000-002043)	Rod Wldt, Drive Linkage	1
	4	53927	(000000-)	Bracket Sppt, Control Rod	2
	5	04843	(000000-)	Bearing, Flange .625 Bore	2
	6	53782	(000000-002043)	Bearing, Thrust .62X1.25X.06	1
	7	39577	(000000-002043)	Sprng,Comp,0.62Idxfl.Wire 3.0L	1
	8	46983	(000000-002043)	Sleeve, .391B 1.38D .19 Hr.Znc	1
	9	53954	(000000-)	Bracket, Speed Limiter	1
	10	51813	(000000-)	Pin,Clevis,0.37 Dia.X 2.12 Lg	1
	11	05686	(000000-)	Rod-End M10X1.5 W/Stud	2
	12	374520	(000000-)	Rod, Speed Limiter, Adjusting, Rh	1
∇	13	72129	(000000-)	Pedal, Propel w/pad	1
▲	14	75430	(000000-)	Pad, Tread	1
	15	69962	(000000-002043)	Bearing, Journal	1
	16	69954	(000000-002043)	Bearing, Thrust	2
	17	75430	(000000-)	Pad, Tread	1
	18	67290	(000000-)	Pin,Clevis,0.50 Dia.X 3.75 Lg	1
	19	74475	(002044-)	Rod Weldt, Drive Linkage	1
	20	73411	(002044-)	Shock Absorber	1
	21	16213	(002044-)	Scr-Shld .312Dx1.00L .25-20	1

Fig. 37 - Hydraulic Pump Linkage Group

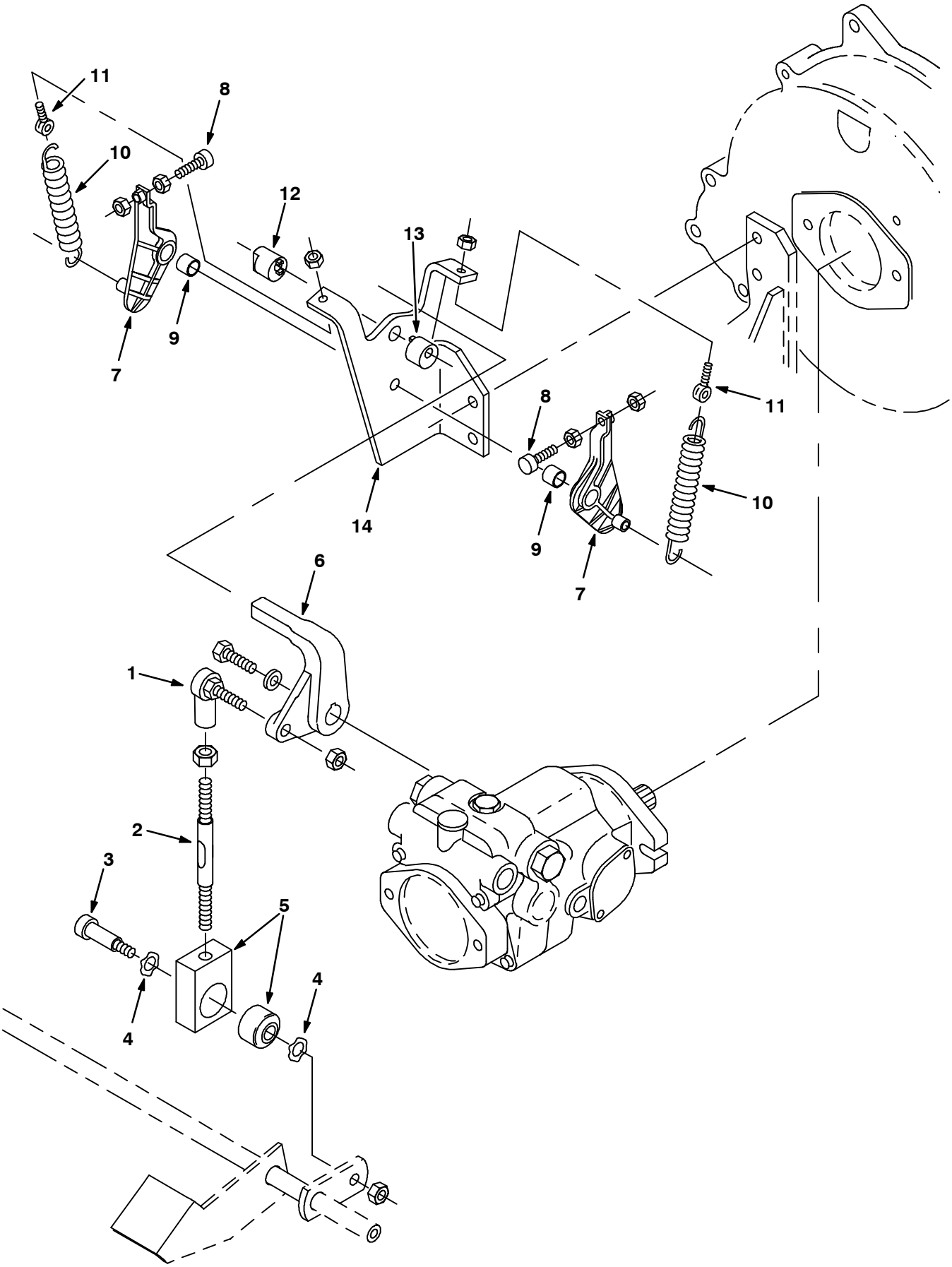

07846/07090

Fig. 37 - Hydraulic Pump Linkage Group

Ref.	Tennant Part No.	Machine Serial Number	Description	Qty.
1	05686	(000000-)	Rod-End M10X1.5 W/Stud	1
2	54015	(000000-)	Rod, Adjusting	1
3	86791	(000000-)	Scr-Shld .500Dx1.25L .38-16	1
4	52508	(000000-)	Washer-Wavy Spring,#Ww-381-&-8	2
5	54997	(000000-)	Bracket Assy, Isolator	1
6	54999	(000000-)	Arm, Control, Pintle	1
7	53953	(000000-)	Arm	2
8	54205	(000000-)	Bumper, Threaded	2
9	63234	(000000-)	Sleeve, Bearing	2
10	11842	(000000-)	Sprng,Tens,0.75Odx.12Wire 3.4L	2
11	48079	(000000-)	Bolt-Eye, .25-20Th .25B 1.4L	2
12	53947	(000000-)	Cam	1
13	54655	(000000-)	Cam	1
14	53950	(000000-)	Bracket, Propel	1

Fig. 38 - Hopper and Dump Door Group

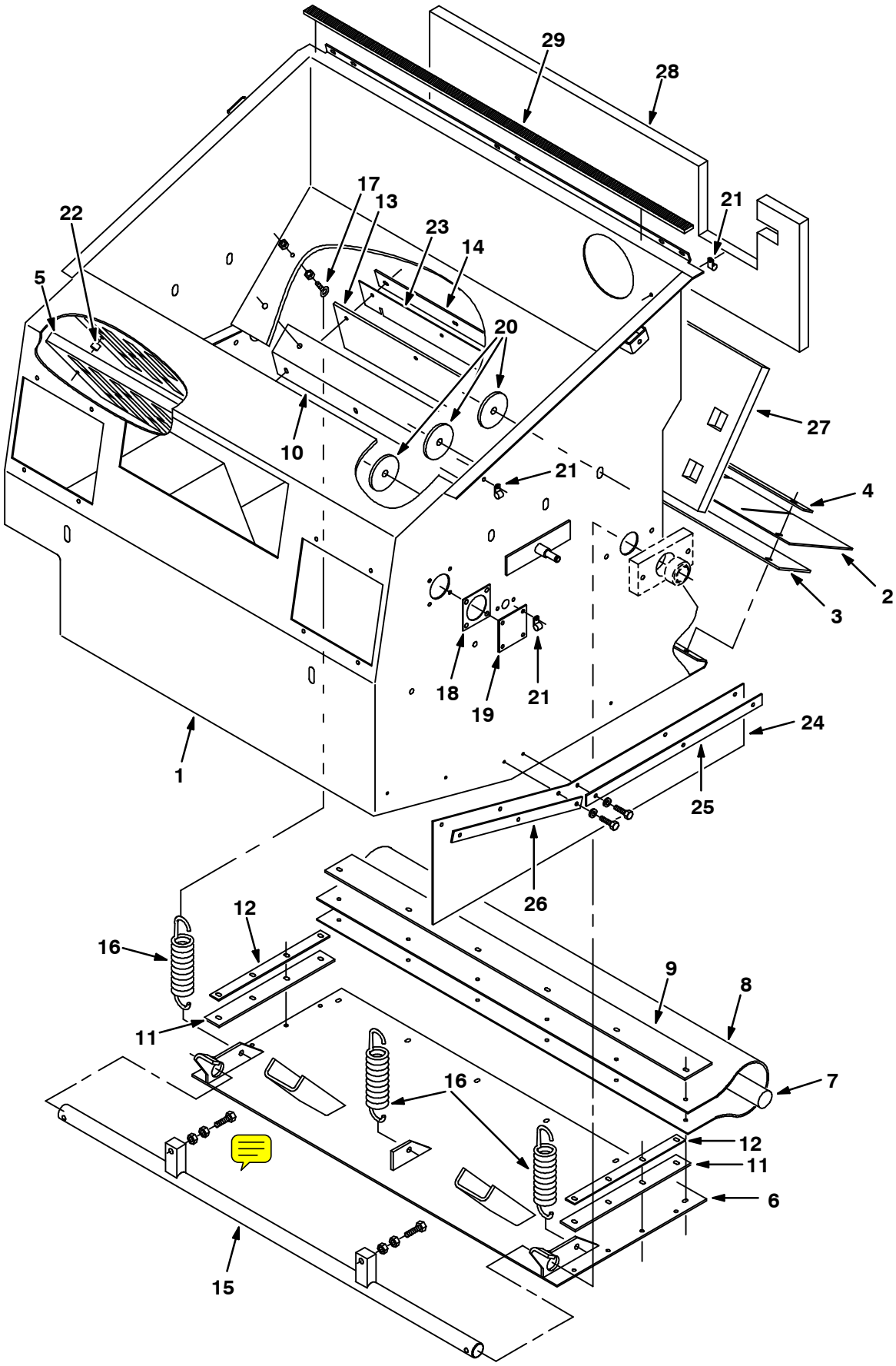

07818/07062

Fig. 38 - Hopper and Dump Door Group

Ref.	Tennant Part No.	Machine Serial Number	Description	Qty.
1	55870	(000000-001586)	Hopper Wldt	1
1	74314	(001587-)	Hopper Wldt	1
2	59680	(000000-)	Skirt, Lip	1
3	59681	(000000-)	Skirt, Lip	1
4	55890	(000000-)	Strap, Main Lip	1
5	55021	(000000-)	Panel, Perma-Filter	1
6	374507	(000000-)	Door Wldt, Dump	1
7	55864	(000000-)	Cord, Sponge	1
8	59685	(000000-)	Seal, Door, Dump	1
9	59686	(000000-)	Strap, Door, Dump	1
10	55879	(000000-)	Angle, Hopper	1
11	59687	(000000-)	Seal, Door, Dump, Side	2
12	59688	(000000-)	Strap, Door, Dump, Side	2
13	58103	(000000-)	Seal, Door, Hopper	1
14	55884	(000000-)	Strap	1
15	55889	(000000-)	Rod Wldt, Pivot	1
16	55892	(000000-)	Spring, Tension	3
17	11893	(000000-)	Bolt-Eye, .25-20Zinc.56D 2.00L	3
18	55965	(000000-)	Seal, Vac Wand	1
19	59189	(000000-)	Plate	1
20	72159	(000000-)	Plate, Lift Arm	6
21	40678	(000000-)	Clamp, Cable .44D .62Wide	3
22	82483	(000000-)	Tube,Spacer,.41Dx.32Bx1.Ol	2
23	59105	(000000-)	Seal, Door, Hopper	1
24	54089	(000000-)	Skirt, Side, Sbdc, Lh	1
25	54013	(000000-)	Plate, Retainer, Lh	1
26	54014	(000000-)	Plate, Retainer, Front, Lh	1
27	59814	(000000-)	Insulation, Acoustic, Hopper	1
28	59821	(000000-)	Insulation, Acoustic, Hopper	1
29	72071	(000000-)	Seal, Foam Rubber	1

Fig. 39 - Hopper Cylinder and Dust Door Group

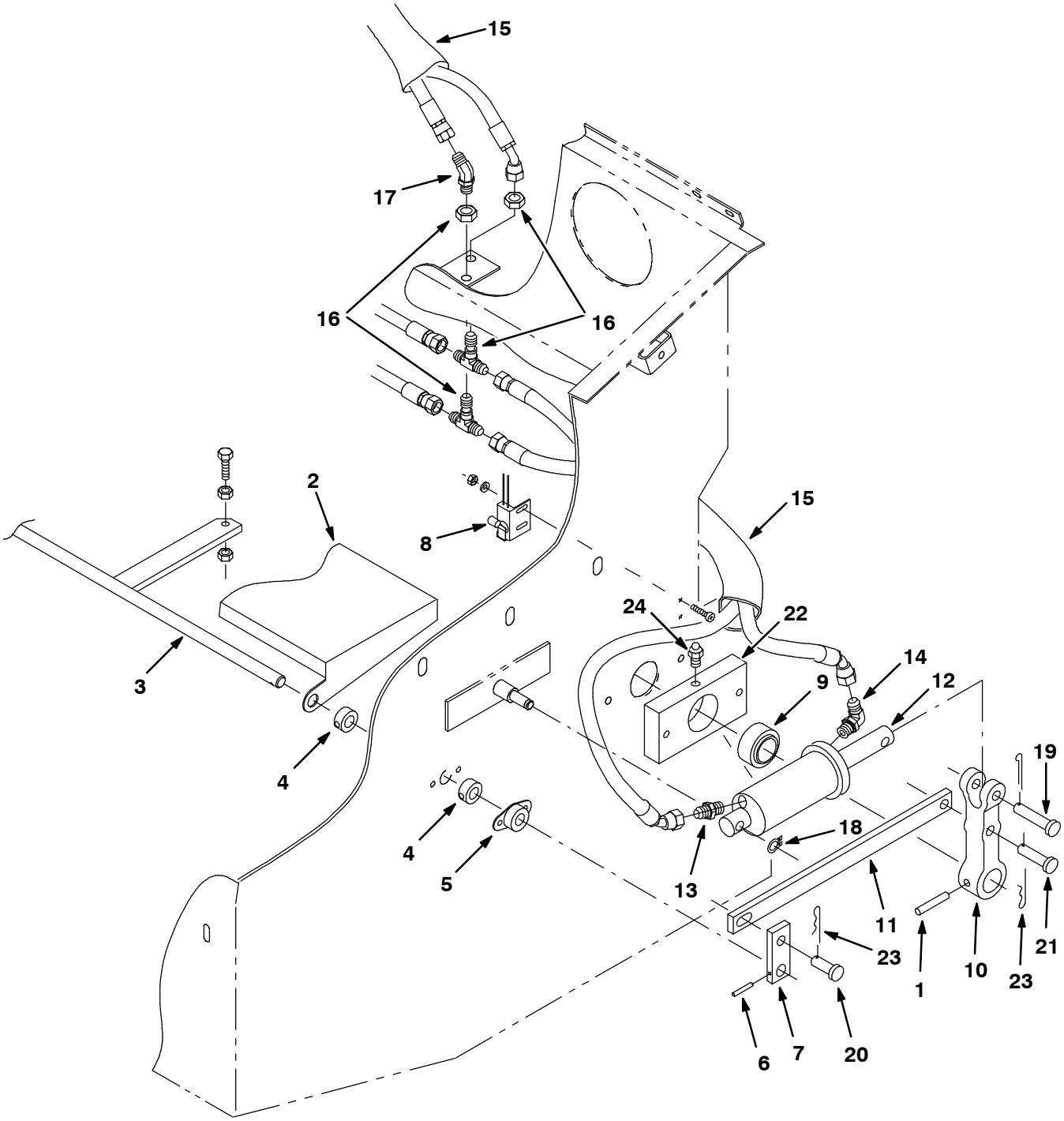

07820/07064

Fig. 39 - Hopper Cylinder and Dust Door Group

Ref.	Tennant Part No.	Machine Serial Number	Description	Qty.
1	51317	(000000-)	Pin,Roll,.38Odx2.00L,.375/.382	2
2	53910	(000000-)	Door, Dust	1
3	53915	(000000-)	Rod Wldt	1
4	34725	(000000-)	Collar, Locking	4
5	34096	(000000-)	Bearing-Flange,2 Hole .625Bore	2
6	26103	(000000-)	Pin,Roll,.18Odx1.25L,.187/.192	2
7	59966	(000000-)	Bar, Link	2
8	59965	(000000-)	Switch Assy, Roller	1
9	42120-1	(000000-)	Bearing-Self Align 1.250 Bore	2
10	78787	(000000-)	Yoke, Pivot, Machining	2
11	55893	(000000-)	Bar, Link	2
12	54096	(000000-)	Cylinder-Hyd,2.0X 4.0Da2500Psi	2
13	55586	(000000-)	Ftg-Hyd Str Jm04/Om04	2
14	77097	(000000-)	Ftg-Hyd E90 Jm04/Om04	2
15	87677	(000000-)	Sleeve-Nyln #20 20.0L	3
16	34392	(000000-)	Ftg-Hyd Tee Jm04Jmbjm	2
17	68441	(000000-)	Ftg-Hyd E45 Jm04/Jf04	1
18	23524	(000000-)	Ring,Retain,Ex,0.50Od,Selflock	2
19	11211	(000000-)	Pin,Clevis,0.50 Dia.X 2.25 Lg	2
20	58078	(000000-)	Pin,Clevis,0.50 Dia.X 1.25 Lg	2
21	51534	(000000-)	Pin,Clevis,0.50 Dia.X 2.00 Lg	2
22	55914	(000000-)	Hub, Pivot	2
23	44906	(000000-)	Pin,Hair Cotter #Lhcot-2,Leitk	4
24	47801	(000000-)	Ftg, Grease .25-28Th Strt .63L	2

Fig. 40 - Hopper Hood and Bumper Group

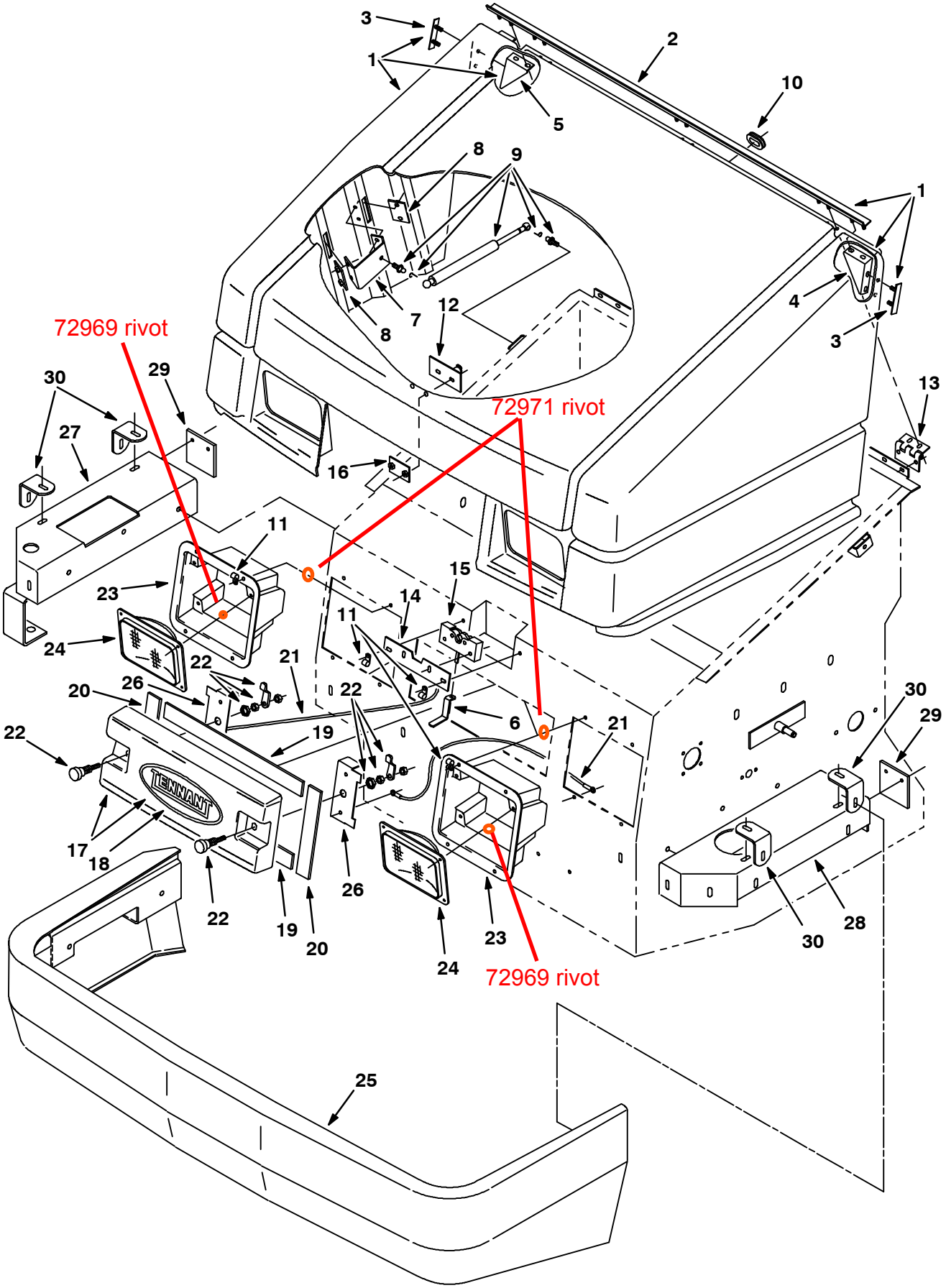

07823/07067

Fig. 40 - Hopper Hood and Bumper Group

	Ref.	Tennant Part No.	Machine Serial Number	Description	Qty.
∇	1	55805	(000000-001586)	Cover Assy, Hopper (Repl. By 84570)	1
▲	2	59442	(000000-001586)	Strip, Mtg, Hinge	1
▲	3	59738	(000000-001586)	Strip, Mtg, Gusset	2
▲	4	59737	(000000-001586)	Bracket, Gusset, Corner, Lh	1
▲	5	59739	(000000-001586)	Bracket, Gusset, Corner, Rh	1
	6	58771	(000000-001586)	Handle, Latch	1
	7	55806	(000000-001586)	Bracket, Mtg, Spring	2
	8	55797	(000000-001586)	Plate, Backing	4
	9	69902	(000000-001586)	Spring Kit, Hopper Cover	2
	10	10632-1	(000000-001586)	Grommet, Rbr, For .19Matl 1.06 ID	1
	11	40678	(000000-001586)	Clamp, Cable .44D .62Wide	4
	12	55800	(000000-001586)	Plate Wldt, Strike	1
	13	58500	(000000-001586)	Hinge, Cover, Hopper	3
	14	59016	(000000-001586)	Plate, Latch	1
	15	55809	(000000-001586)	Latch, Cover	1
	16	55797	(000000-001586)	Plate, Backing	1
∇	17	69901	(000000-001586)	Door, Access w/label	1
▲	18	17200	(000000-001586)	Label, Tennant Logo-10.0 Blue	1
	19	59682	(000000-001586)	Seal, Rbr, .25 X 1.50 X 17.5	2
	20	59683	(000000-001586)	Seal, Rbr, .25 X 1.50 X 9.0	2
	21	57702	(000000-001586)	Cable, Door, Access	2
	22	87337	(000000-001586)	Latch, Door	2
	23	59004	(000000-001586)	Housing, Headlight	2
	24	58524	(000000-001586)	Headlight, 12V.Rect.	2
	25	59723	(000000-001586)	Bumper Wldt, Front	1
	26	59674	(000000-001586)	Bracket, Door	2
	27	55958	(000000-001586)	Channel Wldt, Rh	1
	28	55956	(000000-001586)	Channel Wldt, Lh	1
	29	59448	(000000-001586)	Skirt, Bumper Stop	2
	30	59845	(000000-001586)	Bracket, Bumper	4

Fig. 41 - Hopper Hood and Bumper Group

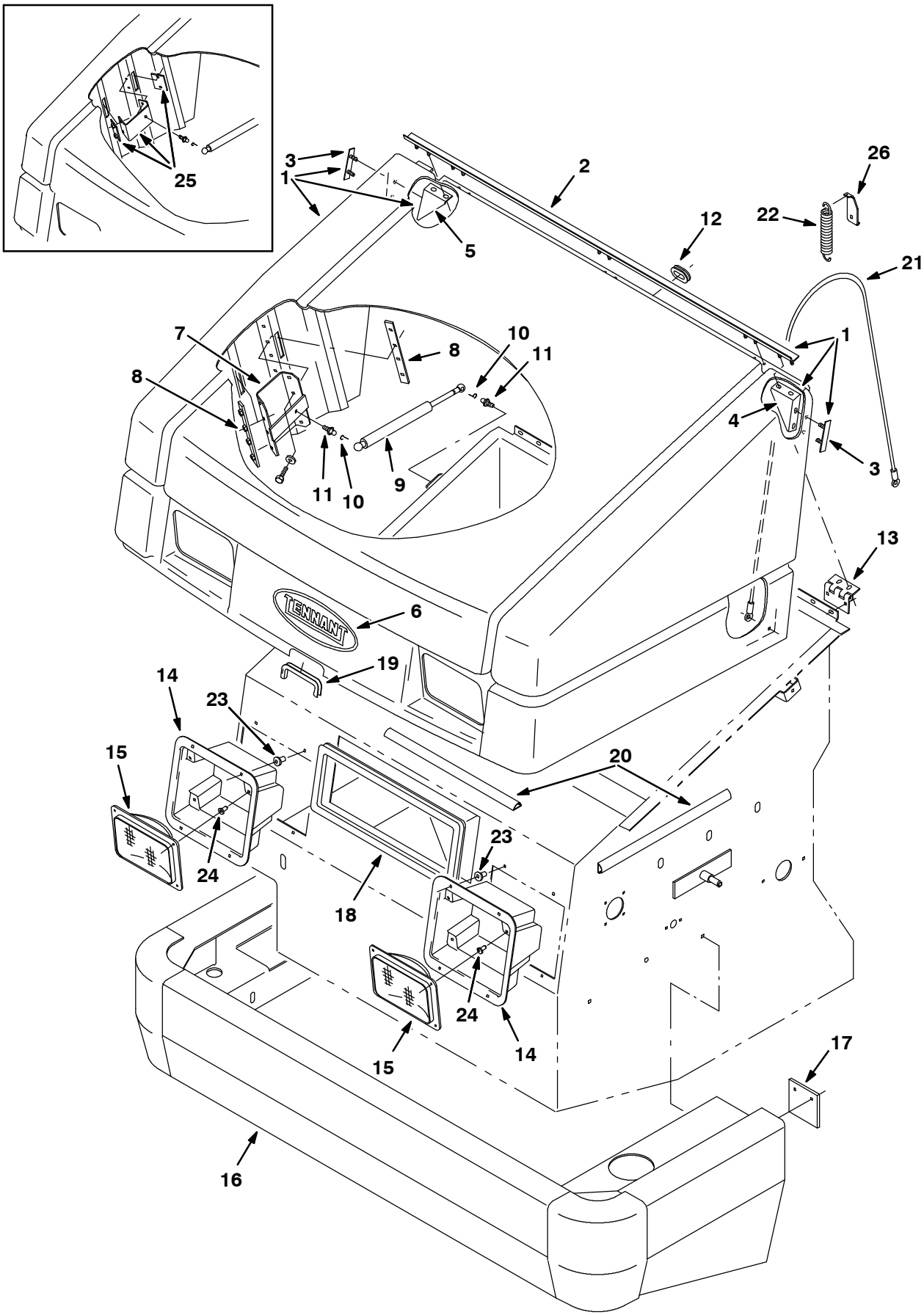

08211/08212

Fig. 41 - Hopper Hood and Bumper Group

	Ref.	Tennant Part No.	Machine Serial Number	Description	Qty.
∇	1	74310	(001587-)	Cover, Hopper	1
▲	2	59442	(001587-)	Strip, Mtg, Hinge	1
▲	3	59738	(001587-)	Strip, Mtg, Gusset	2
▲	4	59737	(001587-)	Bracket, Gusset, Corner, Lh	1
▲	5	59739	(001587-)	Bracket, Gusset, Corner, Rh	1
	6	17200	(001587-)	Label, Tennant Logo- 10.0 Blue	1
	7	70185	(002432-)	Bracket Wldt, Hpr Cvr Sprng	2
	8	70178	(002432-)	Plate Wldt, Sprngbrkt Backing	4
	9	64535	(001587-)	Spring-Gas 120Lb 7.1 Stroke	2
	10	64595	(001587-)	Clip Safety	4
	11	58494	(001587-)	Stud, Ball, Gas Spring	4
	12	10632-1	(001587-)	Grommet,Rbr,1.06Id,For .19Matl	1
	13	58500	(001587-)	Hinge, Coverhopper	3
	14	59004	(001587-)	Housing, Headlight	2
	15	58524	(001587-)	Headlight, 12V.Rect.	2
	16	72065	(001587-)	Bumper Wldt, Front	1
	17	59448	(001587-)	Skirt,Bumperstop	2
	18	74409	(001587-)	Seal, Bulb 50.0Lg	1
	19	62595-6	(001587-)	Molding, Trim 11-14Ga 7.50	1
	20	86331	(001587-)	Duct, Vinyl .40X.75X16.0 .25D	2
	21	74352	(001587-)	Cable, Cover, Safety	1
	22	74353	(001587-)	Spring, Tension	1
	23	72971	(001587-)	Rivet, Plastic .325D x .787	8
	24	72969	(001587-)	Rivet, Plastic .181D x .720	8
	25	70182	(001587-002431)	Replm Kit, Hpr Cvr Sprng Brkt	1
	26	70193	(001587-)	Bracket, Cable Spring	1

Fig. 42 - Filter Box Group

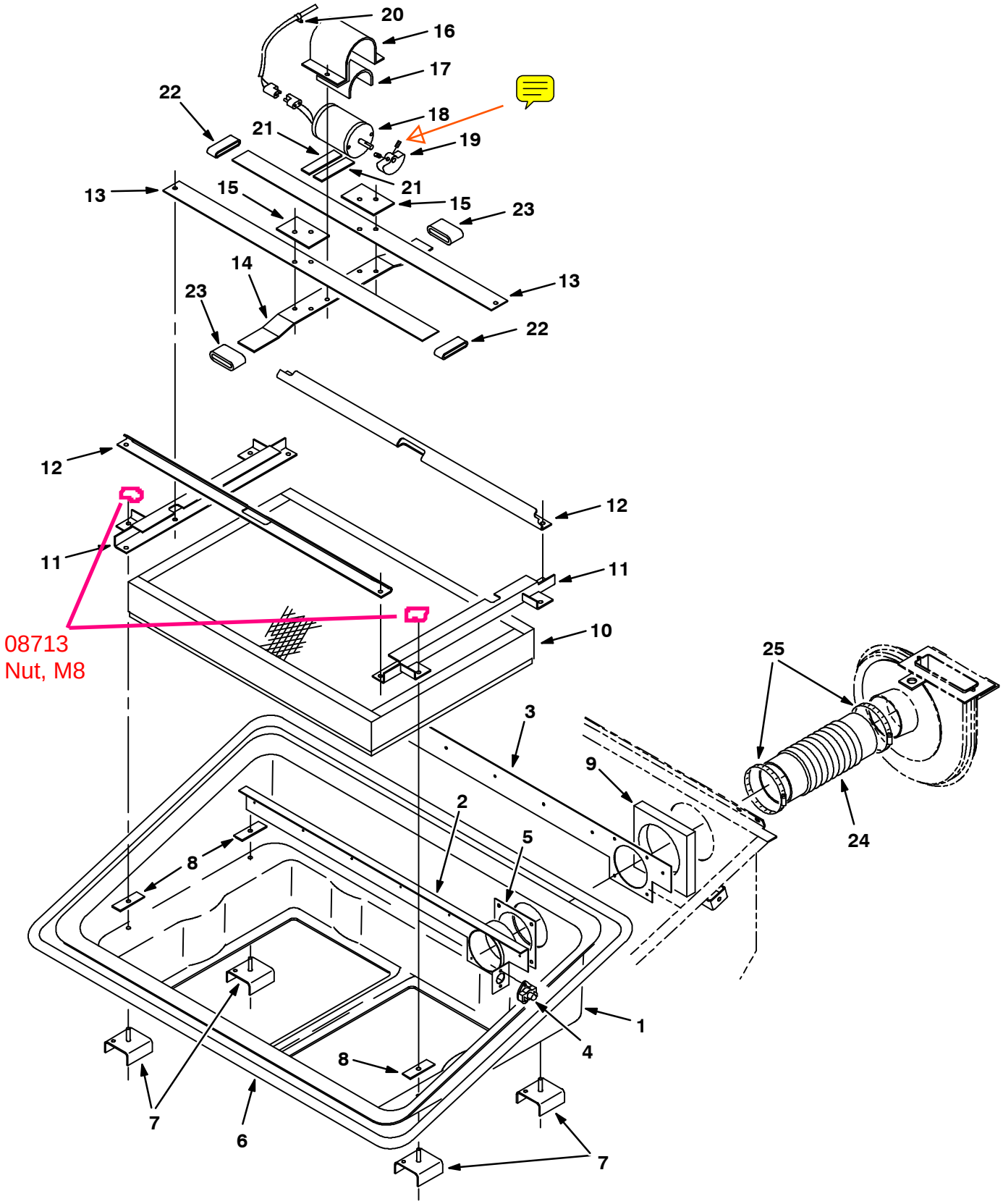

07826/07043

Fig. 42 - Filter Box Group

Ref.	Tennant Part No.	Machine Serial Number	Description	Qty.
1	74434	(000000-)	Tray, Filter Carrier	1
2	59399	(000000-)	Bracket Wldt	1
3	59693	(000000-)	Plate, Tray, Filter	1
4	02712	(000000-)	Thermostat Assembly, 140 Deg	1
5	59844	(000000-)	Seal, Tube, Dust	1
6	79425	(000000-)	Seal, Bulb 140.0 Lg	1
7	55916	(000000-)	Plate	4
8	56610	(000000-)	Plate	4
9	55902	(000000-)	Foam, Acoustic, Hopper	1
10	12962	(000000-)	Filter Pkg, Panel, 94 Pleats	1
11	59545	(000000-)	Bracket Wldt, Filter	2
12	53786	(000000-)	Bracket, Filter	2
13	58482	(000000-)	Spring,Shaker	2
14	58483	(000000-)	Bar, Shaker	1
15	82475	(000000-)	Bar, Spring, Shaker	2
16	36666	(000000-)	Strap, Motor, Shaker	1
17	36658	(000000-)	Bar-Flt .06T 4.00W 5.00L,Rbr	1
18	54121	(000000-)	Motor, Ele Shaker 12V	1
19	55130	(000000-)	Weight, Eccentric	1
20	46236	(000000-)	Clamp-Cable, 0.25Dia 0.56Wth	1
21	36661	(000000-)	Bar-Flt .06T 1.00W 4.00L,Rbr	2
22	36663	(000000-)	Sleeve,1.12B 1.38D1.00 Rubber	2
23	36665	(000000-)	Sleeve,1.12B 1.62D1.50 Rubber	2
24	44255	(000000-)	Hose Flex, 4.0Id X 21.5Lg	1
25	23498	(000000-)	Clamp-Wormdrive, 3.56- 4.50D	2

Fig. 43 - Hopper Lift Arms Group

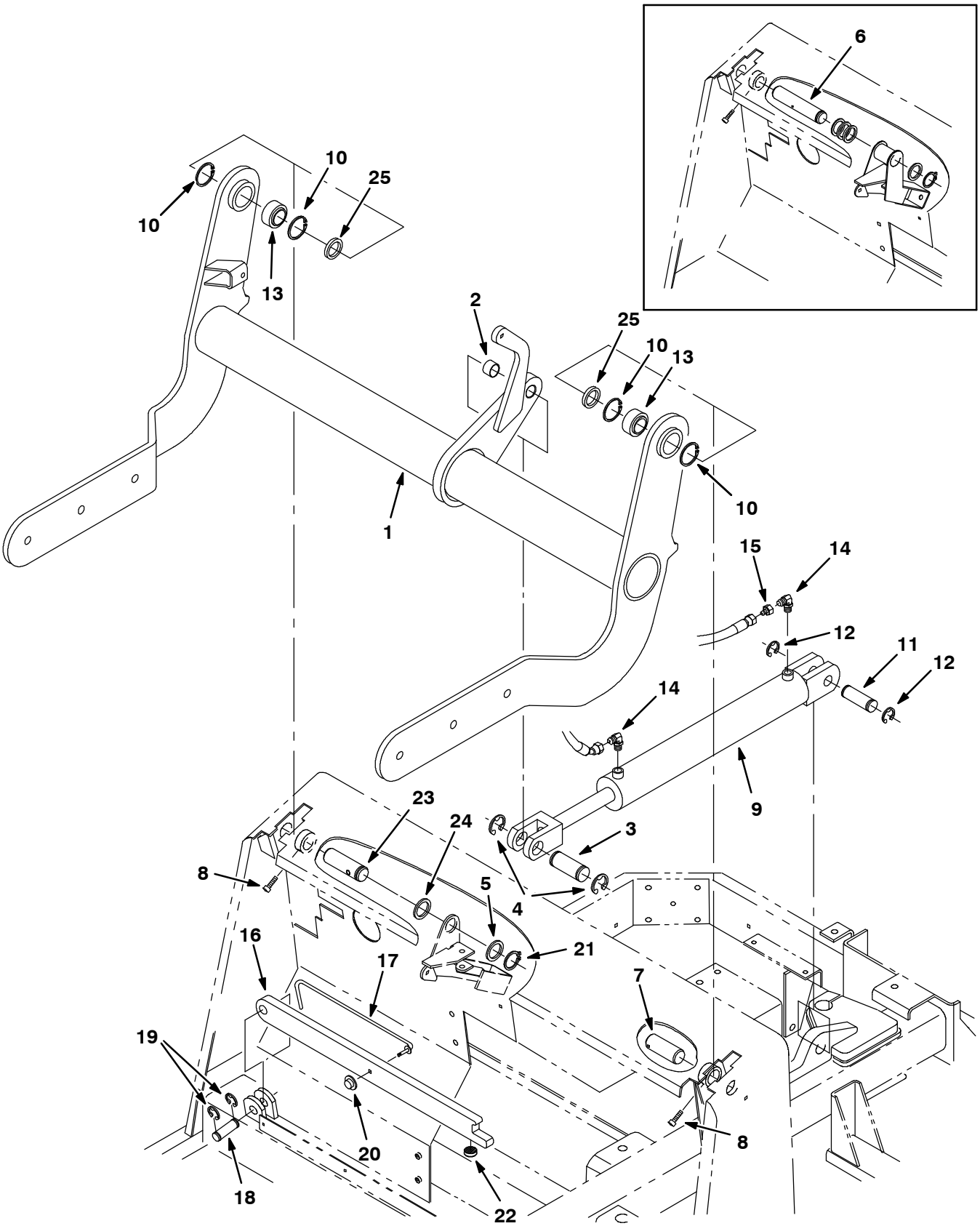

07819/07063

Fig. 43 - Hopper Lift Arms Group

	Ref.	Tennant Part No.	Machine Serial Number	Description	Qty.
	1	59825	(000000-)	Arm Assy, Hopper w/label	1
∇		69908	(000000-)	Pin Assy, Clevis, Hopper Lift	1
▲	2	59866	(000000-)	Bearing, Journal 1.25 Idx1.0Lg	1
▲	3	59867	(000000-)	Pin, Grooved	1
▲	4	59861	(000000-)	Ring, Retaining, Ext, 1.25 Dia	2
	5	54079	(000000-)	Washer,1.281B 1.75D .O8Cr Znc	1
	6	55462	(000000-002506)	Pin, Rh	1
	7	55463	(000000-)	Pin, Lh	1
	8	39308	(000000-)	Scr Soc M 8X1.25 25	2
	9	74419	(000000-)	Cylinder-Hyd (See Breakdowns)	1
	10	59542	(000000-)	Ring, Retaining, Intl, 2.00Dia	4
	11	59380	(000000-)	Pin-Grvd,1.00D 3.0L2/ 2.71Btwn	1
	12	23788	(000000-)	Ring,Retain,Ex,0.98Od,E-Ring	2
	13	42120-1	(000000-)	Bearing-Self Align 1.250 Bore	2
	14	77097	(000000-)	Ftg-Hyd E90 Jm04/Om04	2
	15	16455	(000000-)	Ftg-Hyd Rst Jm04/.047	1
	16	59827	(000000-)	Arm Assy, Safety w/label	1
	17	58645	(000000-)	Handle, Safety Arm	1
	18	59842	(000000-)	Pin, Arm, Safety	1
	19	59840	(000000-)	Ring, Retaining, Ext, .75 Dia	2
	20	59849	(000000-)	Nut, Retainer R/.312 Dia	1
	21	58359	(000000-)	Retaining Ring-External, 1.25D	1
	22	16786	(000000-)	Bumper, Safety Arm	1
	23	74358	(002507-)	Pin, Rh	1
	24	47719	(000000-)	Washer, 1.255B 1.75Od .12Hrs	1
	25	70272	(000000-)	Washer, 1.281B 1.75Od .31Hrznc	2
	25	70271	(000000-)	Washer, 1.281B 1.75Od .25Hrznc	2

Fig. 44 - Side Brush Motor and Pivot Group

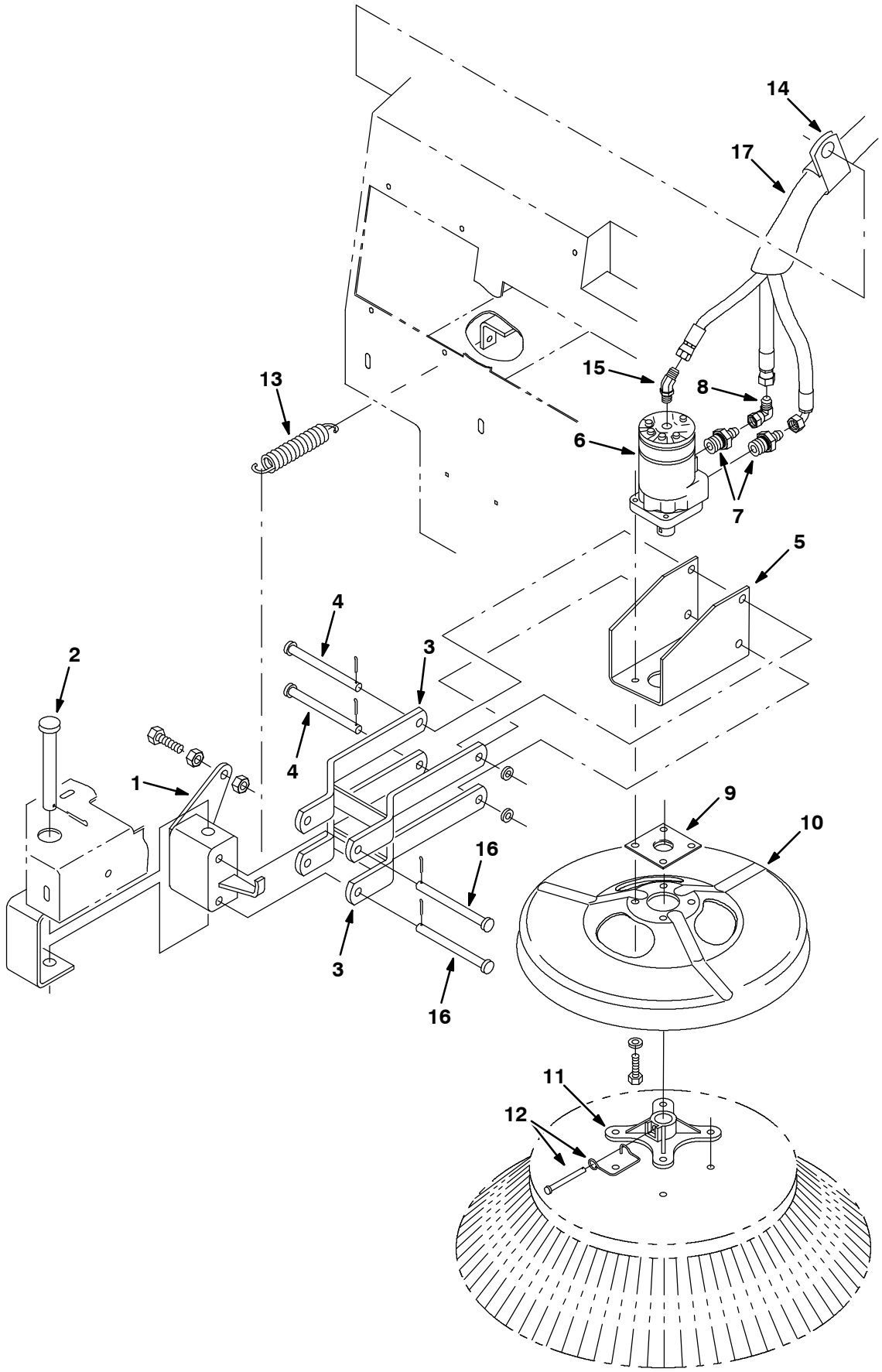

07900/07060

Fig. 44 - Side Brush Motor and Pivot Group

Ref.	Tennant Part No.	Machine Serial Number	Description	Qty.
1	54050	(000000-)	Pivot Assy, S Br	1
2	54660	(000000-)	Pin, Clevis .75 Dia X 5.5 Lg	1
3	53965	(000000-)	Arm Assy, Lift	2
4	51225	(000000-)	Pin,Clevis,0.50 Dia.X 5.50 Lg	2
5	71540	(000000-)	Bracket, Motor	1
6	53435	(000000-)	Motor-Hyd Gear (See Breakdowns)	1
7	47508	(000000-)	Ftg-Hyd Str Jm06/Om10	2
8	47504	(000000-)	Ftg-Hyd E90 Jm06/Jf06	1
9	16082	(000000-)	Guard, String, Brush Motor	1
10	53984	(000000-)	Guard, Brush	1
11	47501	(000000-)	Hub, Brush Adaptor, 1.00B	1
12	84581	(000000-)	Pin Assy, Side Brush W/Clip	1
13	47745	(000000-)	Sprng,Tens,1.12Odx.14Wire 6.3L	1
14	53466	(000000-)	Clamp, Hose	2
15	34359	(000000-)	Ftg-Hyd E45 Jm04/Om04	1
16	51538	(000000-)	Pin,Clevis,0.50 Dia.X 5.00 Lg	2
17	75028	(000000-)	Sleeve-Nyln #20 65.0L	1

Fig. 45 - Side Brush Lift Group

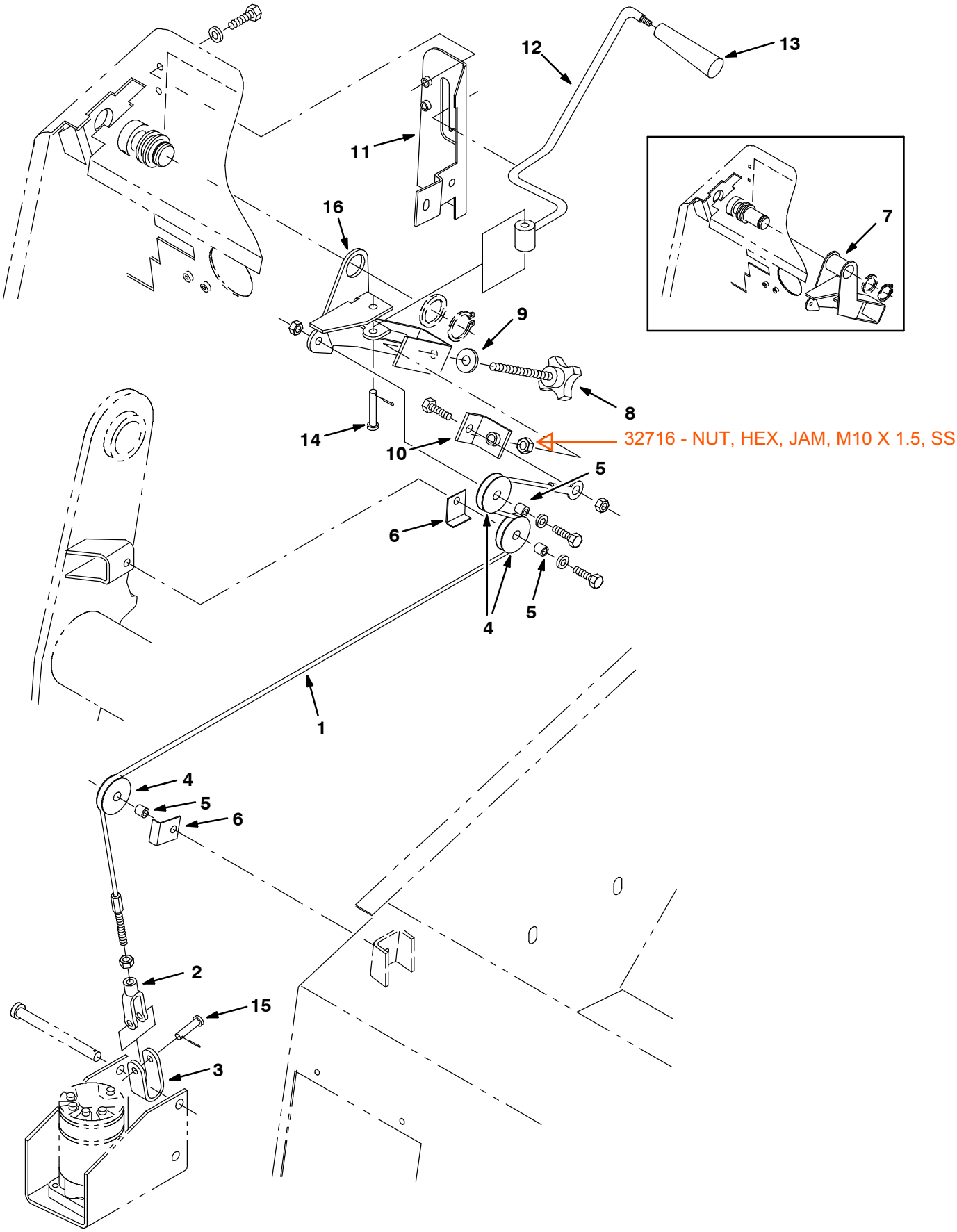

07901/07061

Fig. 45 - Side Brush Lift Group

Ref.	Tennant Part No.	Machine Serial Number	Description	Qty.
1	54934	(000000-)	Cable, Lift, S Br	1
2	12267	(000000-)	Yoke,End-Adjustable	1
3	59899	(000000-)	Bracket, Side Brush	1
4	74391	(000000-)	Pulley Assy - Cable, 1.5 Dia	3
5	56624	(000000-)	Spacer, Pulley	3
6	54400	(000000-)	Angle, Cable Keeper	2
7	22169	(000000-002506)	Replm Kit, S Br Pivot	1
8	54848	(000000-)	Knob, Adjusting	1
9	52296	(000000-)	Washer, .405B .81D .06Nylon	1
10	56662	(000000-)	Bracket	1
11	58872	(000000-)	Panel, Support	1
12	56641	(000000-)	Lever Wldt, S Br	1
13	54995	(000000-)	Knob, Tapered	1
14	29584	(000000-)	Pin,Clevis,0.37 Dia.X 2.00 Lg	1
15	29558	(000000-)	Pin,Clevis,0.37 Dia.X 1.50 Lg	1
16	74355	(002507-)	Bracket Wldt, S Br	1

Fig. 46 - Main Brush Lift Group

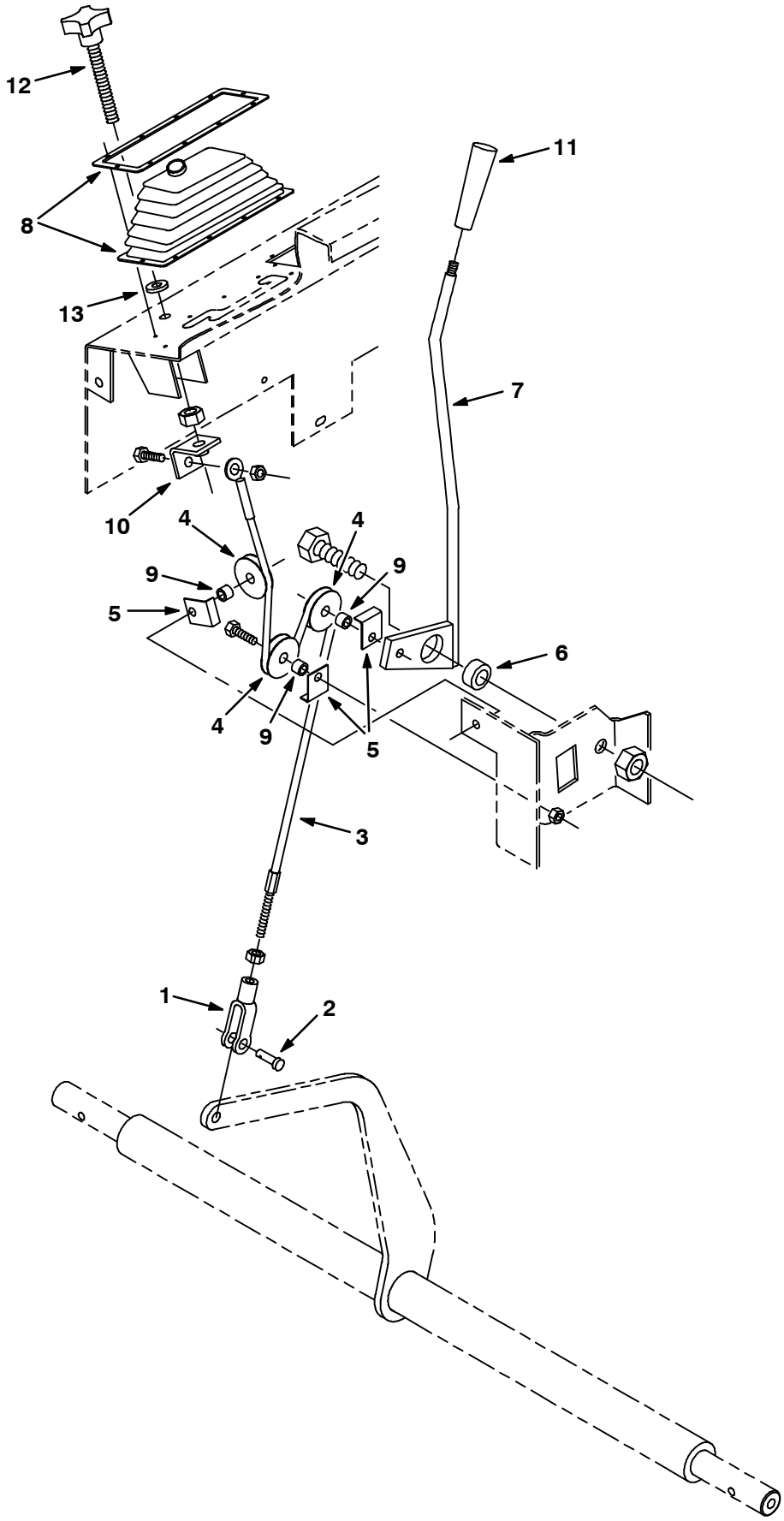

07895/07055

Fig. 46 - Main Brush Lift Group

Ref.	Tennant Part No.	Machine Serial Number	Description	Qty.
1	12267	(000000-)	Yoke,End-Adjustable	1
2	86240	(000000-)	Pin Clevis .375 Dia X 1.13 Lg	1
3	54840	(000000-)	Cable, Lift, M Br	1
4	74391	(000000-)	Pulley Assy - Cable, 1.5 Dia	3
5	54400	(000000-)	Angle, Cable Keeper	3
6	54663	(000000-)	Bearing, Self Aligning	1
7	54118	(000000-)	Lever Wldt, M Br	1
8	69903	(000000-)	Bellows Assy, Brush Lift	1
9	56624	(000000-)	Spacer, Pulley	3
10	56662	(000000-)	Bracket	1
11	54995	(000000-)	Knob, Tapered	1
12	54848	(000000-)	Knob, Adjusting	1
13	52296	(000000-)	Washer, .405B .81D .06Nylon	1

Fig. 47 - Main Brush Drive Group

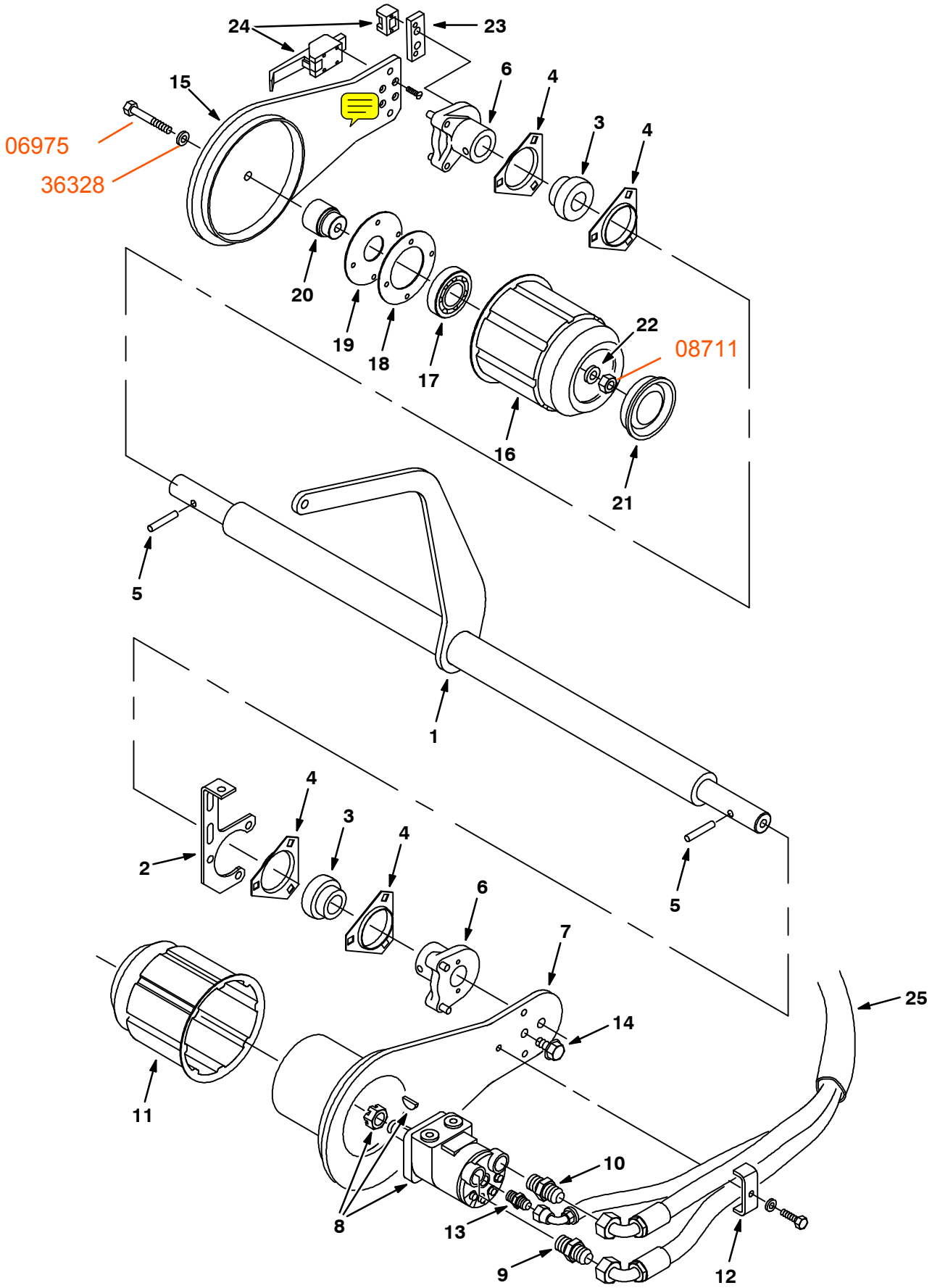

07894/07054

Fig. 47 - Main Brush Drive Group

Ref.	Tennant Part No.	Machine Serial Number	Description	Qty.
1	54693	(000000-)	Shaft Wldt, Brush	1
2	54199	(000000-)	Plate, Mtg, Main Brush Shaft	1
3	51448	(000000-)	Bearing&Clr ,1.25B 2.44D 1.41W	2
4	51449	(000000-)	Flange,Brg,3 Hole	4
5	51317	(000000-)	Pin,Roll,.38Odx2.00L,.375/.382	2
6	54680	(000000-)	Hub Assy, Brush Arm	2
7	13156	(000000-)	Arm Wldt, Brush, Lh	1
8	53434	(000000-002147)	Motor-Hyd Gear (See Breakdowns)	1
8	74468	(002148-)	Motor-Hyd Gear (See Breakdowns)	1
9	44869	(000000-)	Ftg-Hyd Str Jm08/Om08	1
10	52402	(000000-)	Ftg-Hyd Str Jm06/Om08	1
11	87631	(000000-)	Plug Weld, Brush Drive, Sweep	1
12	51715	(000000-)	Clamp, Hose	1
13	55586	(000000-)	Ftg-Hyd Str Jm04/Om04	1
14	53985	(000000-)	Plug, Thread 1/2-13	1
15	54659	(000000-)	Arm Wldt, Idler, W/Brush	1
16	55779	(000000-)	Plug Wldt, Idler	1
17	24899	(000000-)	Bearing-Ball,1.38B 2.83D 0.67W	1
18	30252	(000000-)	Strip, Retainer, Bearing	1
19	30253	(000000-)	Plate, Seal	1
20	30251	(000000-)	Shaft, Idler	1
21	30255	(000000-)	Plug, Tube	1
22	51564	(000000-)	Washer, .531B 1.75D .12Cr.Znc	1
23	54204	(000000-)	Plate, Mtg, Latch	1
24	54878	(000000-)	Latch	1
25	82831	(000000-)	Sleeve-Nyln #24 35.0L	1

Fig. 48 - Vacuum Fan Group

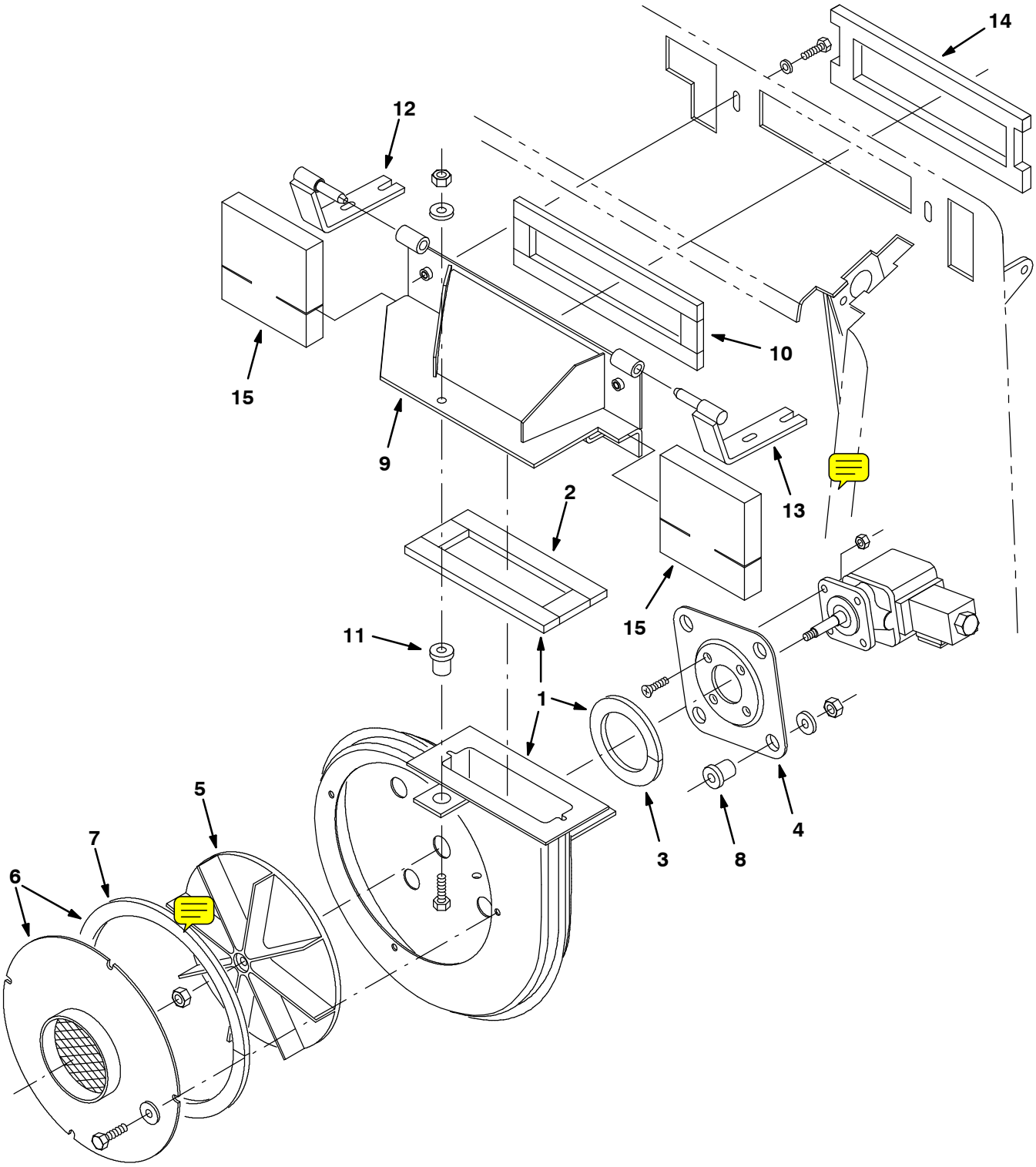

07893/07053

Fig. 48 - Vacuum Fan Group

	Ref.	Tennant Part No.	Machine Serial Number	Description	Qty.
∇	1	72133	(000000-)	Fan Wldt, Vac w/gaskets	1
▲	2	59734	(000000-)	Seal, Fan, Vac, Outlet	1
▲	3	59967	(000000-)	Seal, Fan, Vac, Motor	1
	4	54275A	(000000-)	Bracket, Mounting Motor	1
	5	74454	(000000-)	Impeller 9.00 Dia.	1
∇	6	59656	(000000-)	Fan Wldt, Vac, Inlet w/gasket	1
▲	7	59735	(000000-)	Seal, Fan, Vac, Inlet	1
	8	54274	(000000-)	Isolator-Vibration,60 Lb.Ratng	4
	9	58540	(000000-)	Fan Wldt, Vac, Transition	1
	10	59014	(000000-)	Seal, Fan, Vac, Transition	1
	11	59649	(000000-)	Isolator, Vibration .37 Dia	1
	12	374504	(000000-)	Hinge Wldt, Engine Cover, Rh	1
	13	374505	(000000-)	Hinge Wldt, Engine Cover, Lh	1
	14	69990	(000000-)	Insulation, Acoustic, Engine Cover	1
	15	66184	(000000-)	Seal, Acoustic, Engine Cover	2

Fig. 49 - Vacuum Fan Motor and Fittings Group

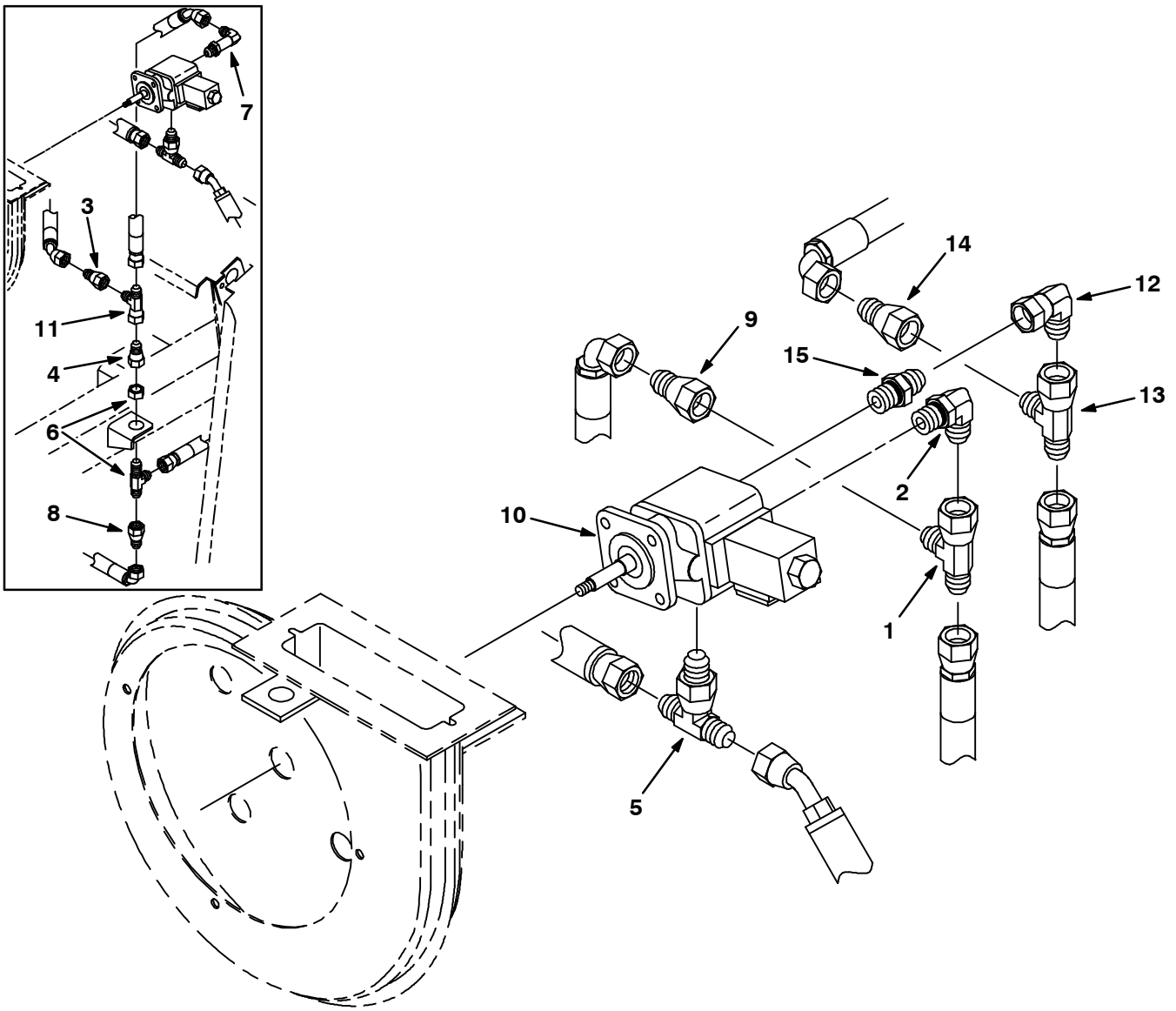

07859/07463

Ref.	Tennant Part No.	Machine Serial Number	Description	Qty.
1	45482	(000000-)	Ftg-Hyd Tee Jm08Jmjf	1
2	44868	(000000-)	Ftg-Hyd E90 Jm08/Om08	1
3	47753	(000000-001418)	Ftg-Hyd Str Jm06/Jf08	1
4	78143	(000000-001418)	Ftg-Hyd Str Jm08/Jf12	1
5	31599	(000000-)	Ftg-Hyd Tee Jm04Omjm	1
6	13114	(000000-001418)	Ftg-Hyd Tee Jm12Jmjmb	1
7	69173	(000000-001418)	Ftg-Hyd E90 Jm08/Om08	1
8	78143	(000000-001418)	Ftg-Hyd Str Jm08/Jf12	1
9	57979	(000000-)	Ftg-Hyd Str Jm04/Jf08	1
10	53485	(000000-)	Motor-Hyd Gear (See Breakdowns)	1
11	45482	(000000-001418)	Ftg-Hyd Tee Jm08Jmjf	1
12	35033	(001419-)	Ftg-Hyd E90 Jm12/Jf12	1
13	40514	(001419-)	Ftg-Hyd Tee Jm12Jmjf	1
14	59975	(001419-)	Ftg-Hyd Str Jm10/Jf12	1
15	62390	(001419-)	Ftg-Hyd Str Jm12/Om08	1

Fig. 50 - Hydraulic Schematic

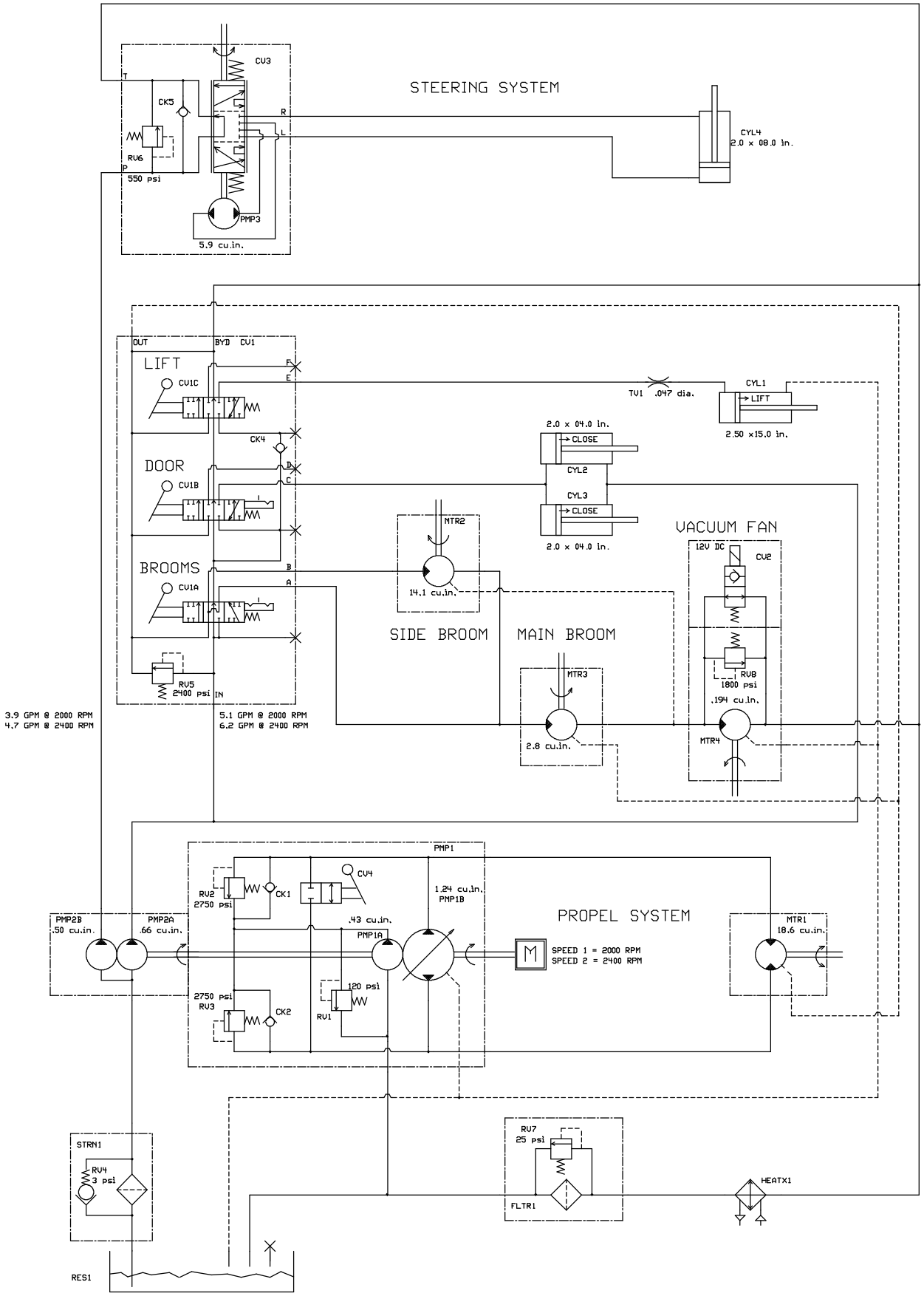

07504

Fig. 51 - Hydraulic Hose Group

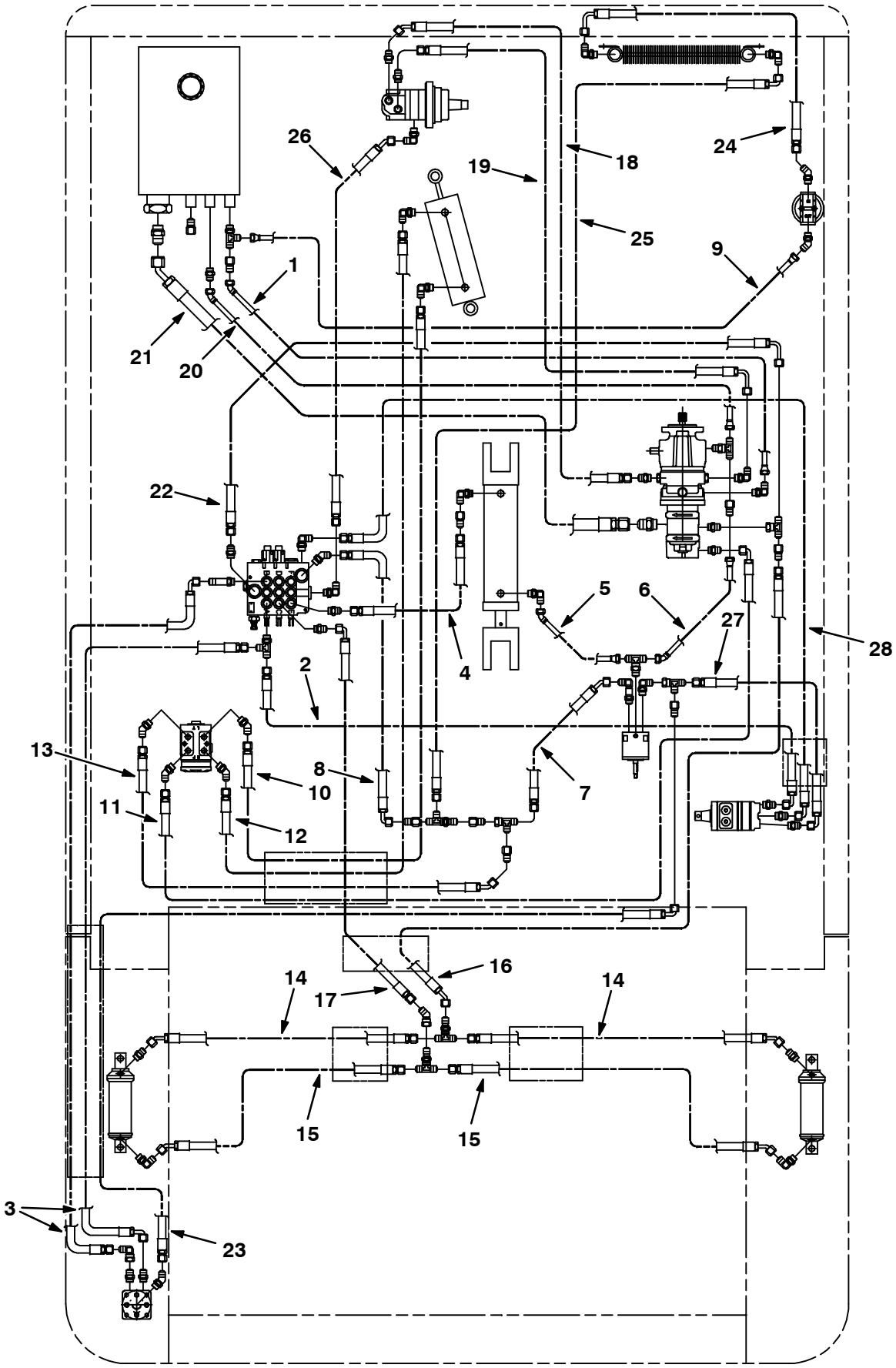

07821/07065

Fig. 51 - Hydraulic Hose Group

Ref.	Tennant Part No.	Machine Serial Number	Description	Qty.
1	59568	(000000-001418)	Hose-Hyd Low08 Jf/J4	1
2	59560	(000000-001418)	Hose-Hyd Med06 Jf/J9	1
3	02469	(000000-001418)	Hose-Hyd Med06 Jf/J9	2
4	55691	(000000-001418)	Hose-Hyd Med04 Jf/Jf	1
5	59565	(000000-001418)	Hose-Hyd Low04 Jf/J4	1
6	59564	(000000-001418)	Hose-Hyd Low04 Jf/J4	1
7	34421	(000000-001418)	Hose-Hyd Med08 Jf/J4	1
8	34394	(000000-001418)	Hose-Hyd Med08 Jf/J9	1
9	59571	(000000-001418)	Hose-Hyd Low12 Jf/Jf	1
10	62100	(000000-001418)	Hose-Hyd Med06 Jf/Jf	1
11	59561	(000000-001418)	Hose-Hyd Med06 Jf/J9	1
12	62337	(000000-001418)	Hose-Hyd Med06 Jf/Jf	1
13	59567	(000000-001418)	Hose-Hyd Med06 Jf/J4	1
14	57173	(000000-001418)	Hose-Hyd Med04 Jf/J4	2
15	19644	(000000-001418)	Hose-Hyd Med04 Jf/J4	2
16	59581	(000000-001418)	Hose-Hyd Med04 Jf/J4	1
17	59582	(000000-001418)	Hose-Hyd Med04 Jf/J9	1
18	59574	(000000-001418)	Hose-Hyd Med10 Jf/J4	1
19	59575	(000000-001418)	Hose-Hyd Med10 Jf/Jl9	1
20	59573	(000000-001418)	Hose-Hyd Low06 Jf/J4	1
21	59572	(000000-001418)	Hose-Hyd Suc20 Jf/J4	1
22	59576	(000000-001418)	Hose-Hyd Med08 Jf/Jl9	1
23	59579	(000000-001418)	Hose-Hyd Med04 Jf/J9	1
24	59106	(000000-001418)	Hose-Hyd Med12 Jf/Jl9	1
25	19647	(000000-001418)	Hose-Hyd Med12 Jf/J9	1
26	59585	(000000-001418)	Hose-Hyd Med04 Jf/J4	1
27	19637	(000000-001418)	Hose-Hyd Med08 Jf/J9	1
28	57962	(000000-001418)	Hose-Hyd Med04 Jf/J9	1

Fig. 52 - Hydraulic Hose Group

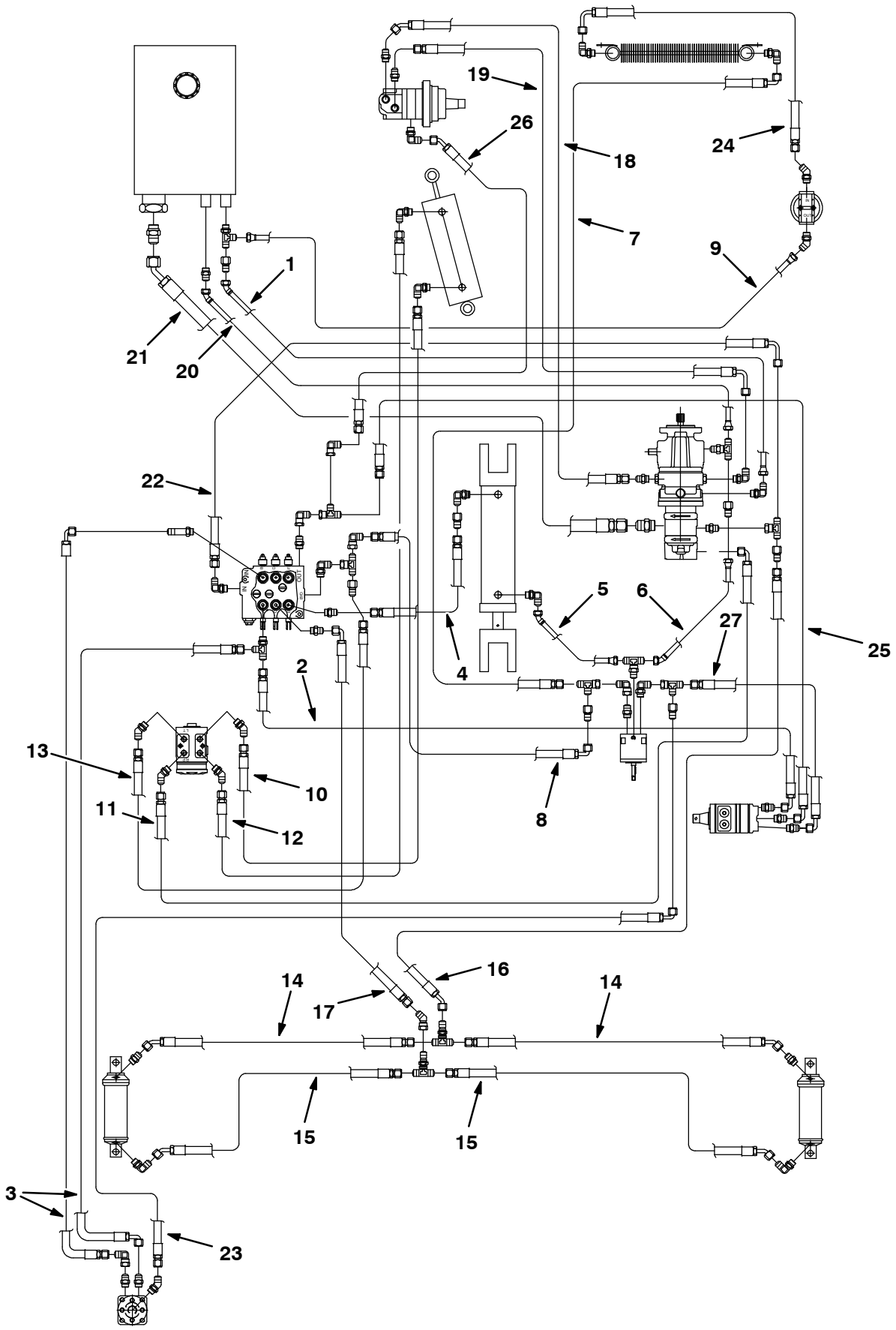

08907/07065

Fig. 52 - Hydraulic Hose Group

Ref.	Tennant Part No.	Machine Serial Number	Description	Qty.
1	59568	(001419-)	Hose-Hyd Low08 Jf/J4	1
2	59560	(001419-)	Hose-Hyd Med06 Jf/J9	1
3	02469	(001419-)	Hose-Hyd Med06 Jf/J9	2
4	55691	(001419-)	Hose-Hyd Med04 Jf/Jf	1
5	59565	(001419-)	Hose-Hyd Low04 Jf/J4	1
6	59564	(001419-)	Hose-Hyd Low04 Jf/J4	1
7	31719	(001419-)	Hose-Hyd Med12 Jf/J9	1
8	59563	(001419-)	Hose-Hyd Med10 Jf/J9	1
9	35488	(001419-)	Hose-Hyd Low12 Jf/Jf	1
10	62100	(001419-)	Hose-Hyd Med06 Jf/Jf	1
11	59561	(001419-)	Hose-Hyd Med06 Jf/J9	1
12	62337	(001419-)	Hose-Hyd Med06 Jf/Jf	1
13	62100	(001419-)	Hose-Hyd Med06 Jf/J4	1
14	57173	(001419-)	Hose-Hyd Med04 Jf/J4	2
15	19644	(001419-)	Hose-Hyd Med04 Jf/J4	2
16	59581	(001419-)	Hose-Hyd Med04 Jf/J4	1
17	59582	(001419-)	Hose-Hyd Med04 Jf/J9	1
18	59574	(001419-)	Hose-Hyd Med10 Jf/J4	1
19	59575	(001419-)	Hose-Hyd Med10 Jf/Jl9	1
20	59573	(001419-)	Hose-Hyd Low06 Jf/J4	1
21	59572	(001419-)	Hose-Hyd Suc20 Jf/J4	1
22	59576	(001419-)	Hose-Hyd Med08 Jf/Jl9	1
23	59579	(001419-)	Hose-Hyd Med04 Jf/J9	1
24	59106	(001419-)	Hose-Hyd Med12 Jf/Jl9	1
25	57962	(001419-)	Hose-Hyd Med04 Jf/J9	1
26	59585	(001419-)	Hose-Hyd Med04 Jf/J4	1
27	19637	(001419-)	Hose-Hyd Med08 Jf/J9	1

Fig. 53 - Hydraulic Reservoir Group

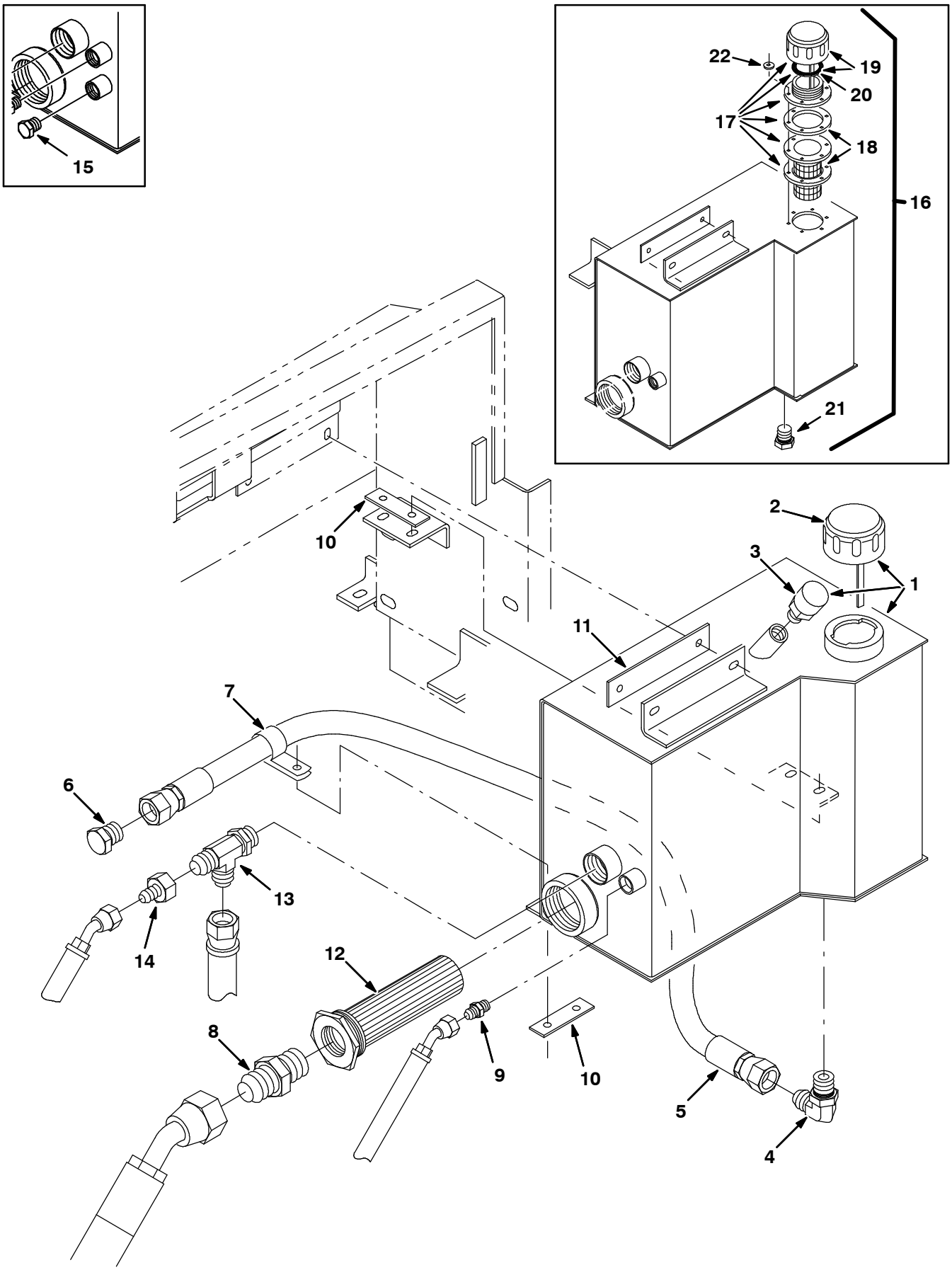

07845/07089

Fig. 53 - Hydraulic Reservoir Group

	Ref.	Tennant Part No.	Machine Serial Number	Description	Qty.
∇	1	72136	(003219-)	Reservoir, 07.0 Gal W/label	1
▲	2	23163	(003219-)	Cap, Hyd Reservoir W/dipstick	1
▲	3	23182	(003219-)	Breather, Hyd, 20 Micron	1
	4	56821	(xxxxxx-)	Ftg-Hyd E90 Jm08/Om10	1
	5	13115	(xxxxxx-)	Hose-Hyd Low08 Jf/Jf	1
	6	16376	(xxxxxx-)	Ftg-Hyd Plg Jm08	1
	7	53466	(xxxxxx-)	Clamp-Cable, 1.50d 1.00w Stl	1
	8	58858	(000000-)	Ftg-Hyd Str Jm20/Om20	1
	9	56690	(000000-)	Ftg-Hyd Str Jm06/Om06	1
	10	59789	(000000-)	Pad, Tank, Hyd	4
	11	59790	(000000-)	Pad, Tank, Hyd	1
	12	31613	(000000-)	Strainer-Hyd Suction 25-100-03	1
	13	42216	(000000-)	Ftg-Hyd Tee Jm12Jmom	1
	14	78143	(000000-)	Ftg-Hyd Str Jm08/Jf12	1
	15	46482	(000000-xxxxxx)	Ftg-Hyd Plg Om06	1
∇	16	74398	(000000-003218)	Tank Wldt Repl. By 72136	1
▲∇	17	61408	(000000-003218)	Breather, Hyd	1
▲▲	18	61288	(000000-003218)	Gasket, Hyd Tank Breather	2
▲▲	19	79040	(000000-003218)	Breather, Hyd Cap (Includes Gasket)	1
▲▲	20	70006	(000000-003218)	Gasket, Cap	1
▲	21	40362	(000000-003218)	Ftg-Hyd Plg Om10	1
▲	22	70246	(000000-003218)	Washer, .188B .375D .030Nylon	6

Fig. 54 - Hydraulic Valve Group

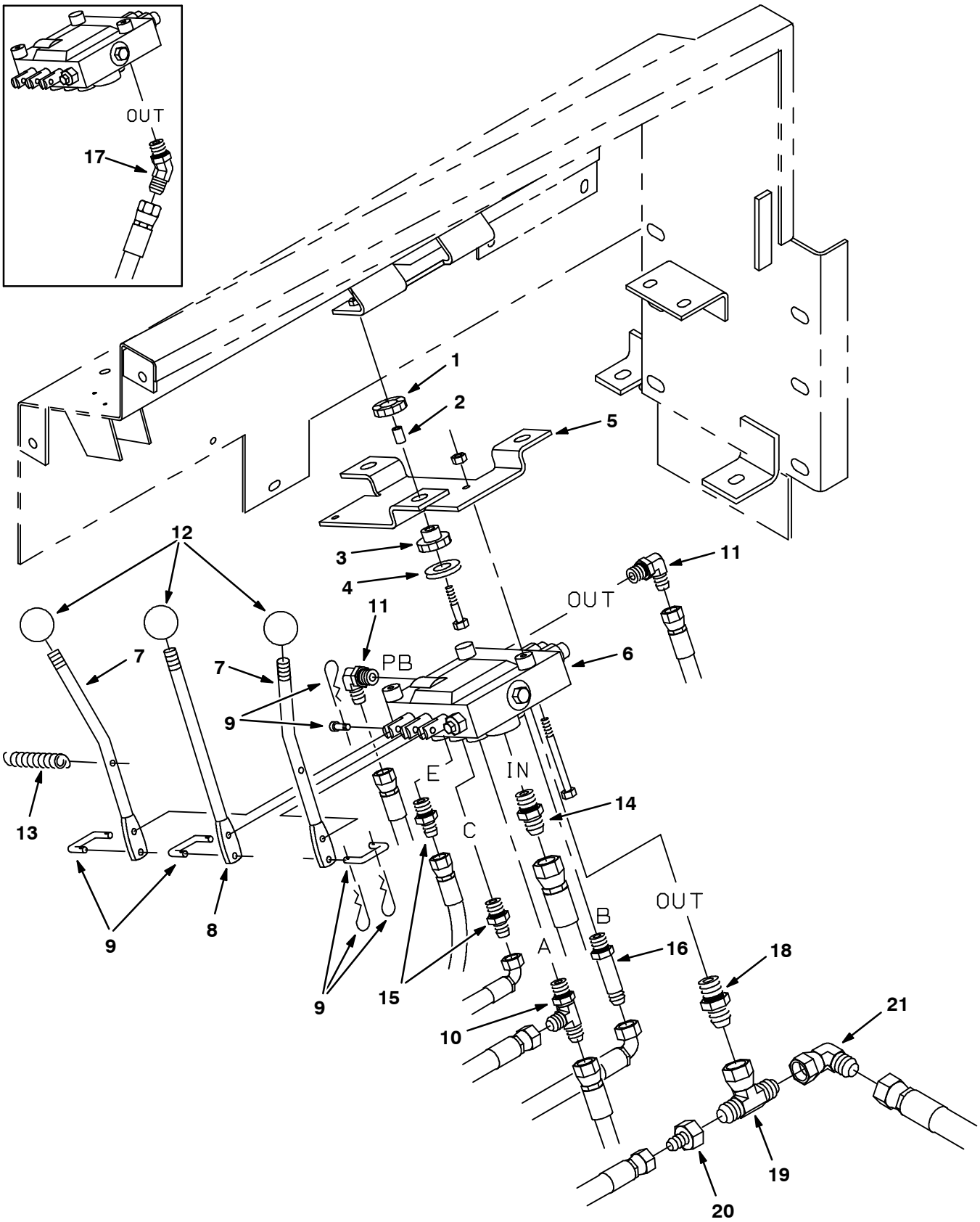

07892/07052

Fig. 54 - Hydraulic Valve Group

	Ref.	Tennant Part No.	Machine Serial Number	Description	Qty.
∇		69910	(000000-002774)	Isolator Assy, Valve	1
▲	1	62172	(000000-002774)	Ring	3
▲	2	64905	(000000-002774)	Sleeve, .259B .38D .62 Dom	3
▲	3	62173	(000000-002774)	Bushing, Isolator-Inner,Rbr.	3
▲	4	30013	(000000-002774)	Washer-Flt .31 Fender Pltd	3
	5	55446	(000000-002774)	Bracket, Mtg, Valve	1
	6	53830	(000000-002774)	Valve-Hyd,Manual (Repl. By 48761) (See Breakdowns)	1
	7	54115	(000000-002774)	Handle, Control Valve	2
	8	54102	(000000-002774)	Handle, Control Valve	1
	9	69911	(000000-002774)	Link Assy, Valve Handle	3
	10	76316	(000000-002774)	Ftg-Hyd Tee Jm06Jmom	1
	11	47638	(000000-002774)	Ftg-Hyd E90 Jm04/Om06	2
	12	59530	(000000-002774)	Knob, 1.375 Dia, Black	3
	13	59870	(000000-002774)	Spring,Tens, .50Dx.05Wire 2.5L	1
	14	44869	(000000-002774)	Ftg-Hyd Str Jm08/Om08	1
	15	55685	(000000-002774)	Ftg-Hyd Str Jm04/Om06	2
	16	59577	(000000-002774)	Ftg-Hyd Str Jm06Om06L	1
	17	42226	(000000-001418)	Ftg-Hyd E45 Jm08/Om08	1
	18	47518	(001419-002774)	Ftg-Hyd Str Jm10/Om08	1
	19	50421	(001419-002774)	Ftg-Hyd Tee Jm10/JfJm	1
	20	47754	(001419-002774)	Ftg-Hyd Str Jm06/Jf10	1
	21	54194	(001419-002774)	Ftg-Hyd E90 Jm10/Jf10	1

Fig. 55 - Hydraulic Valve Group

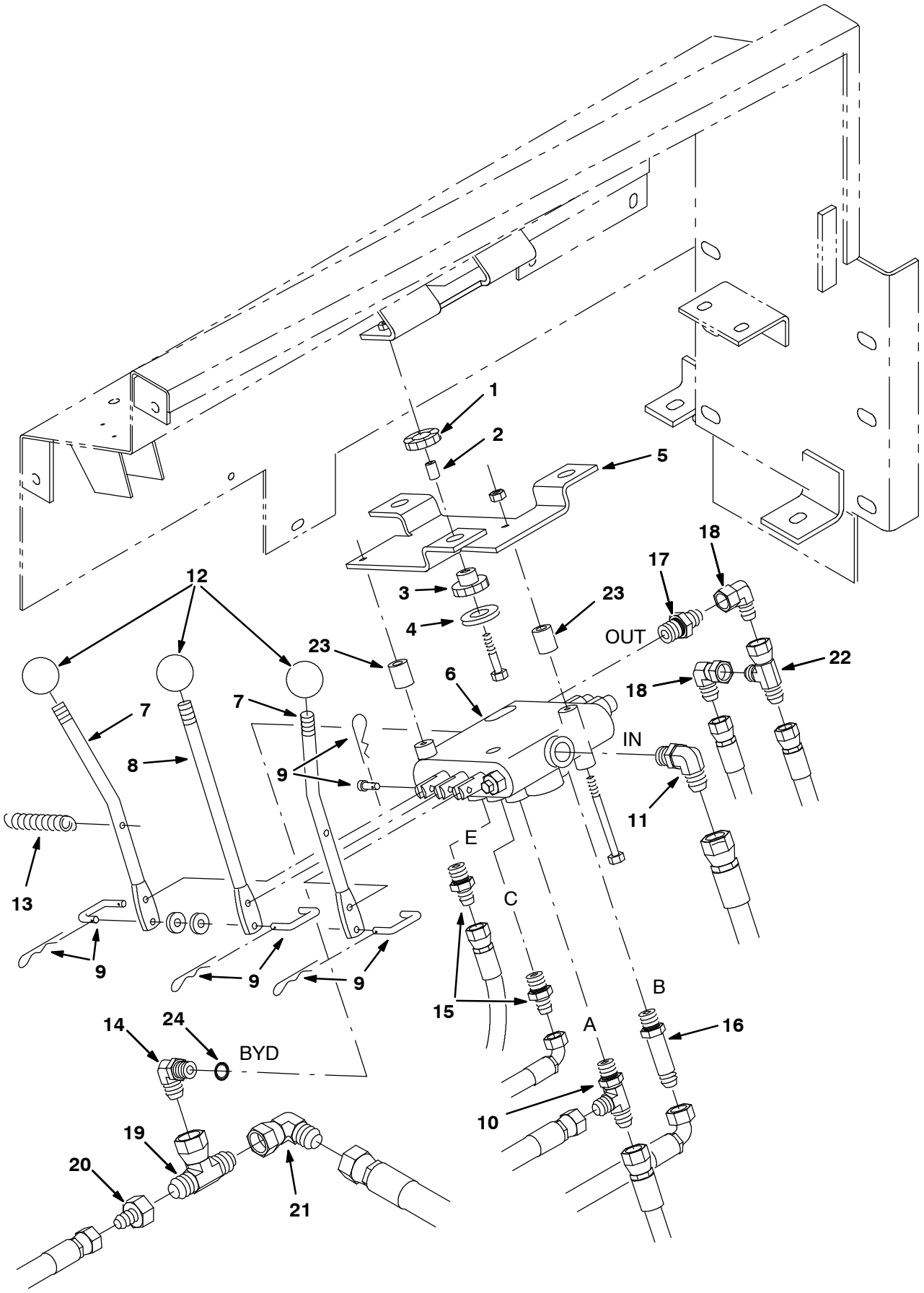

10194/07052

Fig. 55 - Hydraulic Valve Group

	Ref.	Tennant Part No.	Machine Serial Number	Description	Qty.
∇		69910	(002775-)	Isolator Assy, Valve	1
▲	1	62172	(002775-)	Ring	3
▲	2	64905	(002775-)	Sleeve, .259B .38D .62 Dom	3
▲	3	62173	(002775-)	Bushing, Isolator-Inner,Rbr.	3
▲	4	30013	(002775-)	Washer-Flt .31 Fender Pltd	3
	5	55446	(002775-)	Bracket, Mtg, Valve	1
	6	48751	(002775-)	Valve-Hyd,Manual (See Breakdowns)	1
	7	54115	(002775-)	Handle, Control Valve	2
	8	54102	(002775-)	Handle, Control Valve	1
	9	48760	(002775-)	Link Assy, Valve Handle	3
	10	76316	(002775-)	Ftg-Hyd Tee Jm06Jmom	1
	11	44868	(002775-)	Ftg-Hyd E90 Jm08/Om08	1
	12	59530	(002775-)	Knob, 1.375 Dia, Black	3
	13	59870	(002775-)	Spring,Tens, .50Dx.05Wire 2.5L	1
	14	56827	(002775-)	Ftg-Hyd E90 Jm10/Om08	1
	15	55685	(002775-)	Ftg-Hyd Str Jm04/Om06	2
	16	59577	(002775-)	Ftg-Hyd Str Jm06Om06L	1
	17	55686	(002775-)	Ftg-Hyd Str Jm04/Om08	1
	18	39210	(002775-)	Ftg-Hyd E90 Jm04/Jf04	2
	19	50421	(002775-)	Ftg-Hyd Tee Jm10/JfJm	1
	20	47754	(002775-)	Ftg-Hyd Str Jm06/Jf10	1
	21	54194	(002775-)	Ftg-Hyd E90 Jm10/Jf10	1
	22	57988	(002775-)	Ftg-Hyd Tee Jm04Jmjf	1
	23	09900-1	(002775-)	Sleeve, .260B .50D .75	2
	24	84624	(002775-)	Seal, Oring .103 x .612Id	1

Fig. 56 - Hydraulic Pumps Group

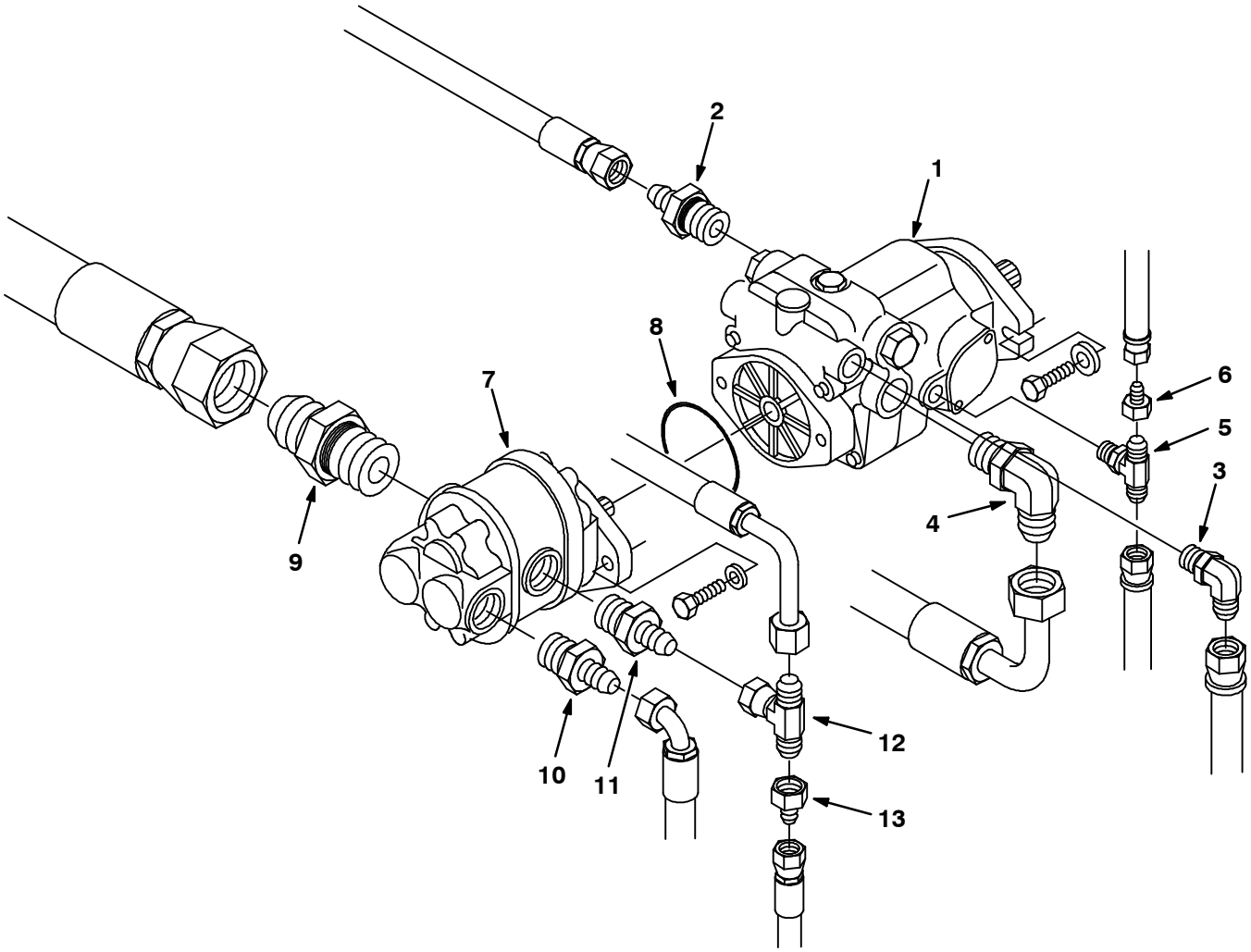

07899/07059

Ref.	Tennant Part No.	Machine Serial Number	Description	Qty.
1	53603	(000000-002073)	Pump-Hyd Piston (See Breakdowns) (Repl. by 70133)	1
1	74465	(002074-002435)	Pump-Hyd Piston (See Breakdowns) (Repl. by 70179)	1
1	79768	(002436-)	Pump-Hyd Piston (See Breakdowns)	1
2	42223	(000000-)	Ftg-Hyd Str Jm10/Om12	1
3	44868	(000000-)	Ftg-Hyd E90 Jm08/Om08	1
4	53076	(000000-)	Ftg-Hyd E90 Jm10/Om12	1
5	67683	(000000-)	Ftg-Hyd Tee Jm06Omjm	1
6	47752	(000000-)	Ftg-Hyd Str Jm04/Jf06	1
7	53554	(000000-)	Pump-Hyd Gear (See Breakdowns)	1
8	65145-1	(000000-)	O-Ring Gland	1
9	58858	(000000-)	Ftg-Hyd Str Jm20/Om20	1
10	47508	(000000-)	Ftg-Hyd Str Jm06/Om10	1
11	56692	(000000-)	Ftg-Hyd Str Jm08/Om10	1
12	76315	(000000-)	Ftg-Hyd Tee Jm08Jfjm	1
13	57979	(000000-)	Ftg-Hyd Str Jm04/Jf08	1

Fig. 57 - Pressure Switch Group

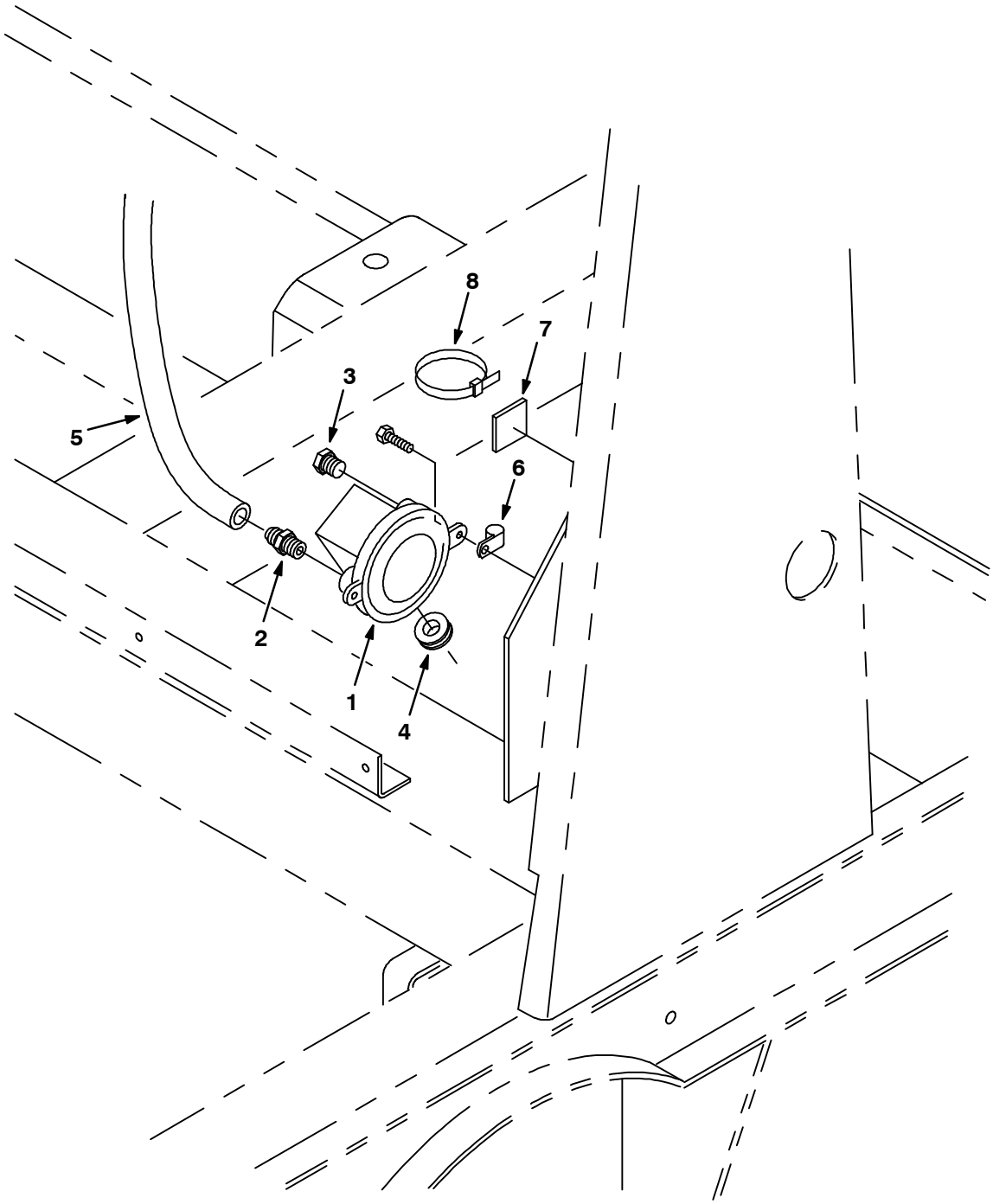

07916/07508

Ref.	Tennant Part No.	Machine Serial Number	Description	Qty.
1	34868	(000000-)	Switch, Pressure	1
2	40607	(000000-)	Ftg-Brs Str Bm03/Pm02	1
3	82739	(000000-)	Ftg, Breather	1
4	10632-4	(000000-)	Grommet,Rbr,0.62Id,For .06Matl	1
5	39780	(000000-)	Hose Vac.,Rubber, .16Id,40.0L	1
6	46236	(000000-)	Clamp-Cable, 0.25Dia 0.56Wth	1
7	55248	(000000-)	Cabletie Mount, Adhesive	4
8	49266	(000000-)	Tie, Cable 1.75D Max 7.50Lg	4

Fig. 58 - Electrical Schematic

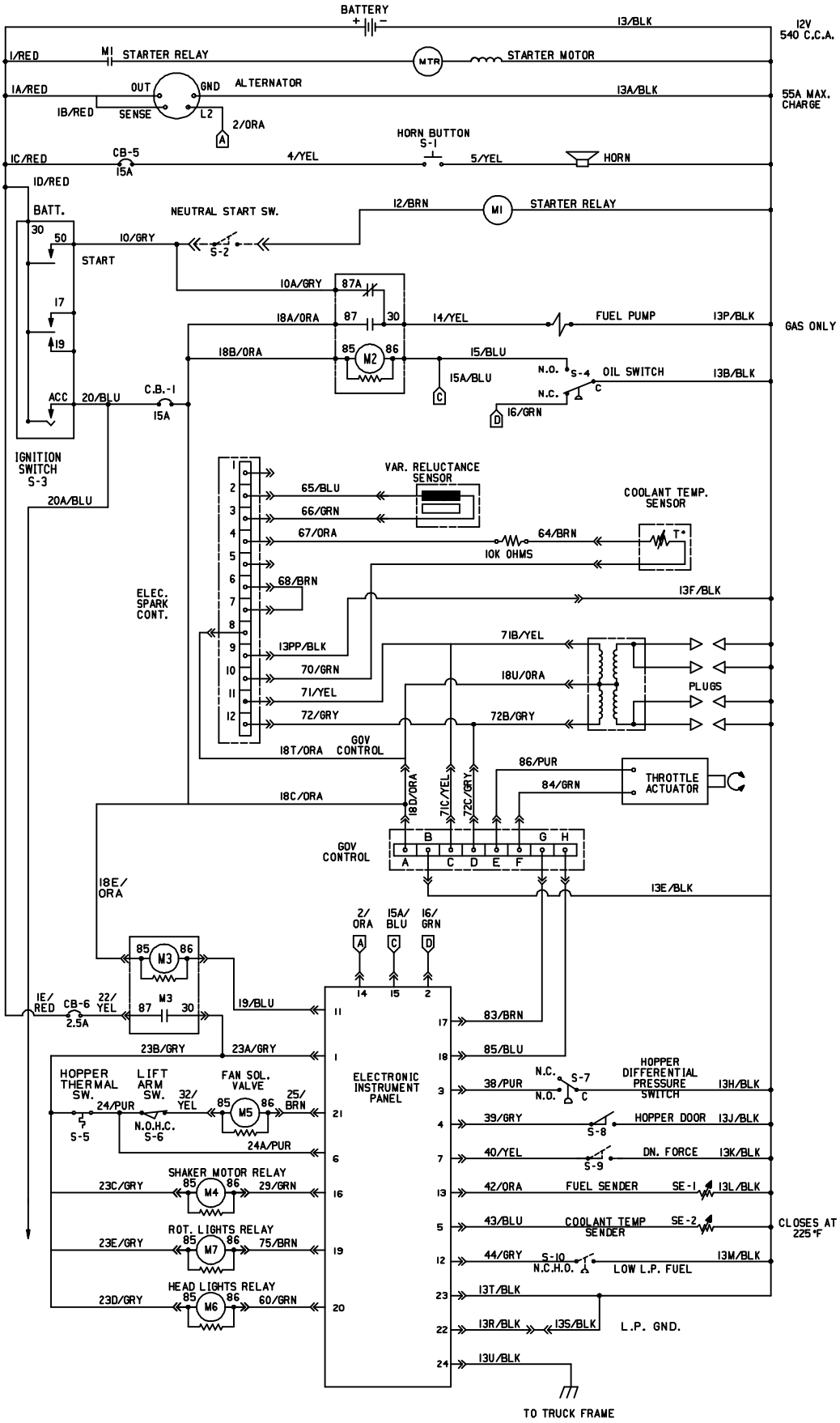

07502

Fig. 58 - Electrical Schematic

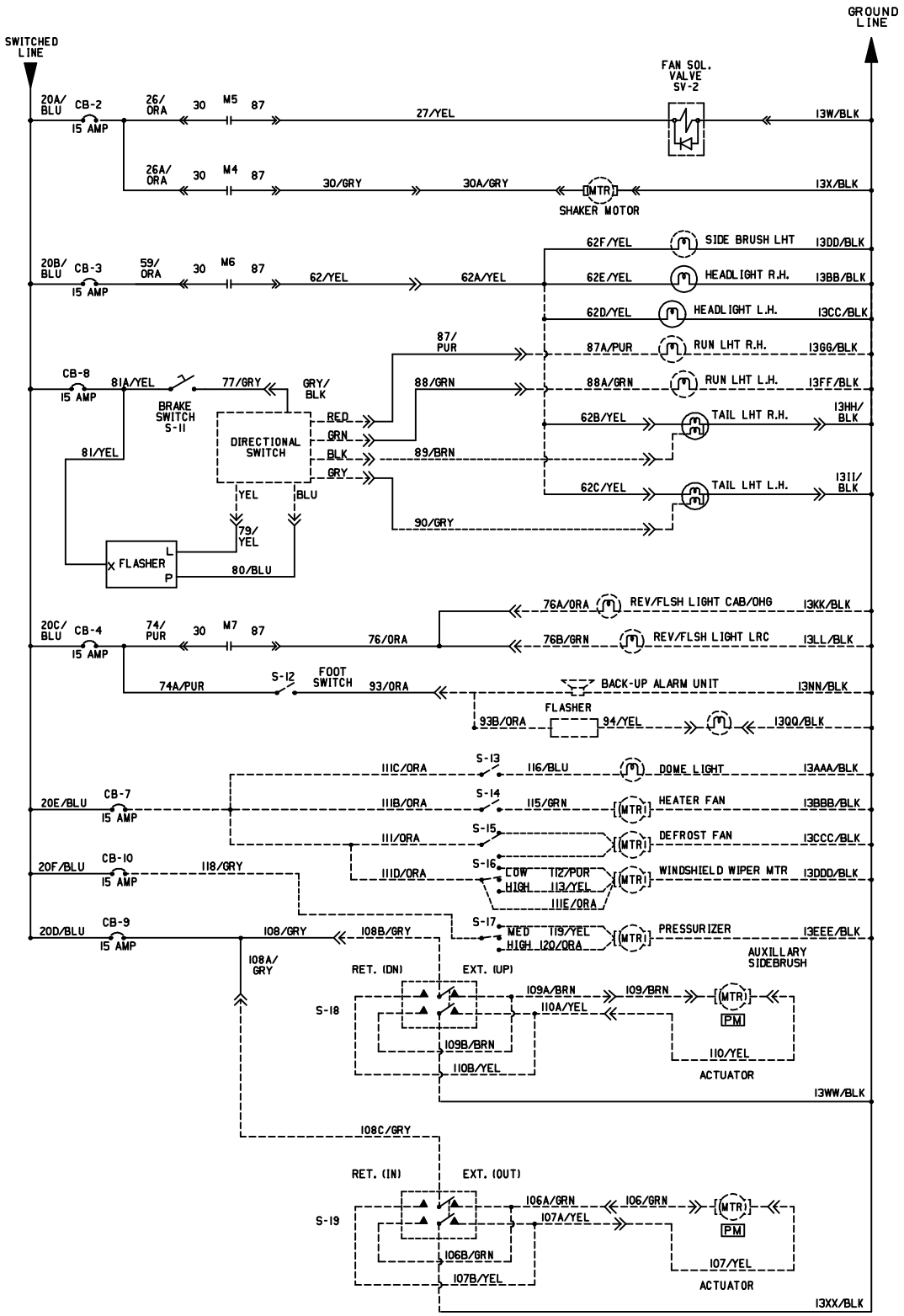

LEGEND			
M	POWER RELAY	HM	HOURMETER
MTR	MOTOR	SV	SOLENOID VALVE
CB	CIRCUIT BREAKER	S	SWITCH
PM	PERMANENT MAGNET	ACC	ACCESSORY
J	JACK-FEM. SOCKET	GND	GROUND CHASSIS
P	PLUG-MALE PIN	C	COMMON
PB	PUSHBUTTON	N.O.	NORMALLY OPEN
VM	VOLTMETER	N.C.	NORMALLY CLOSED
FU	FUSE		

07502

Home Find... Go To..

Fig. 59 - Wire Harnesses Group

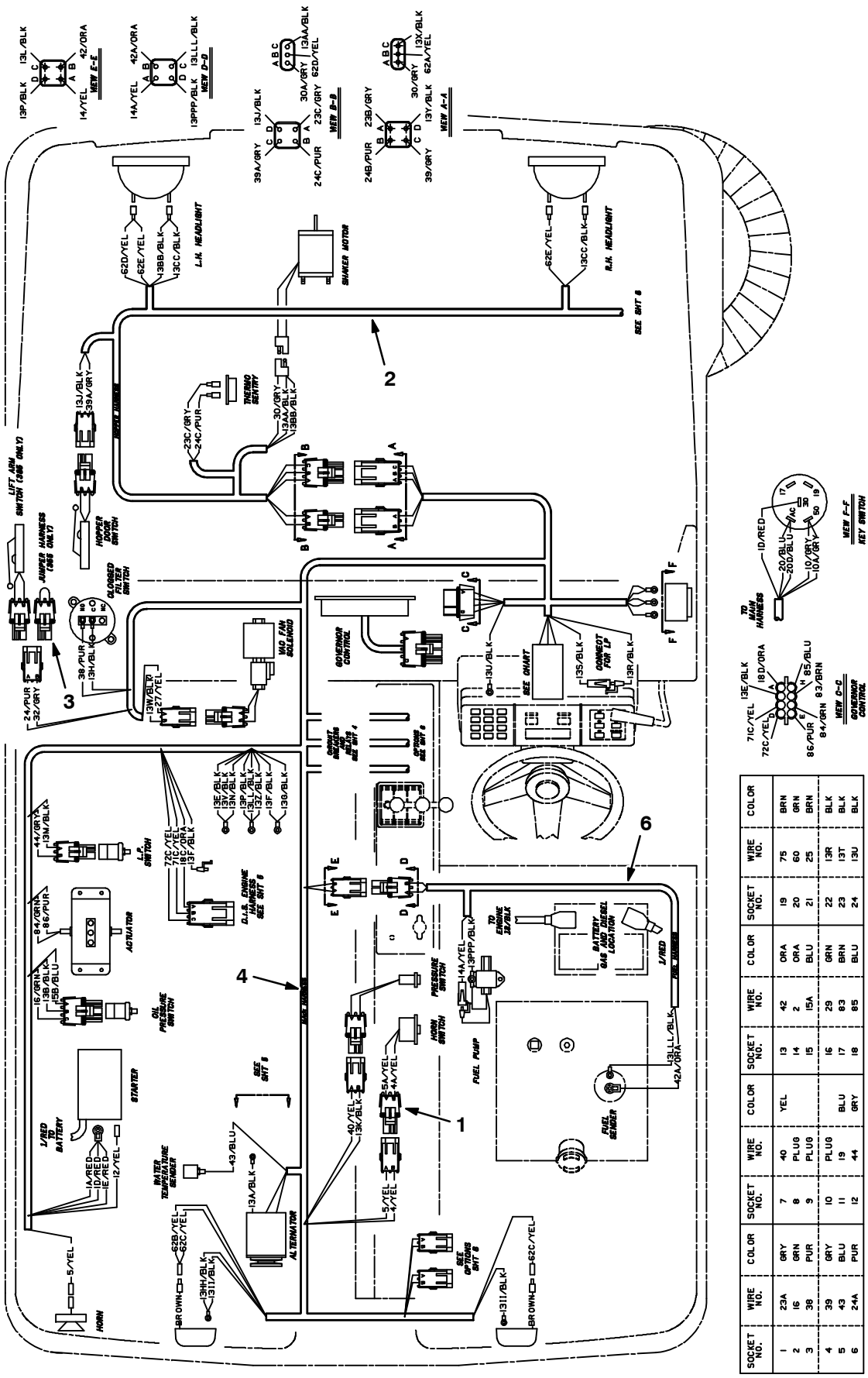

SOCKET NO.	WIRE NO.	COLOR	SOCKET NO.	WIRE NO.	COLOR	SOCKET NO.	WIRE NO.	COLOR	SOCKET NO.	WIRE NO.	COLOR
1	23A	GRY	7	40	YEL	13	42	ORA	19	75	BRN
2	16	GRN	8	PLUG		14	2	ORA	20	60	GRN
3	38	PUR	9	PLUG		15	15A	BLU	21	25	BRN
4	39	GRY	10	PLUG		16	29	GRN	22	13R	BLK
5	43	BLU	11	19	BLU	17	83	BRN	23	13T	BLK
6	24A	PUR	12	44	GRY	18	85	BLU	24	13U	BLK

Fig. 59 - Wire Harnesses Group

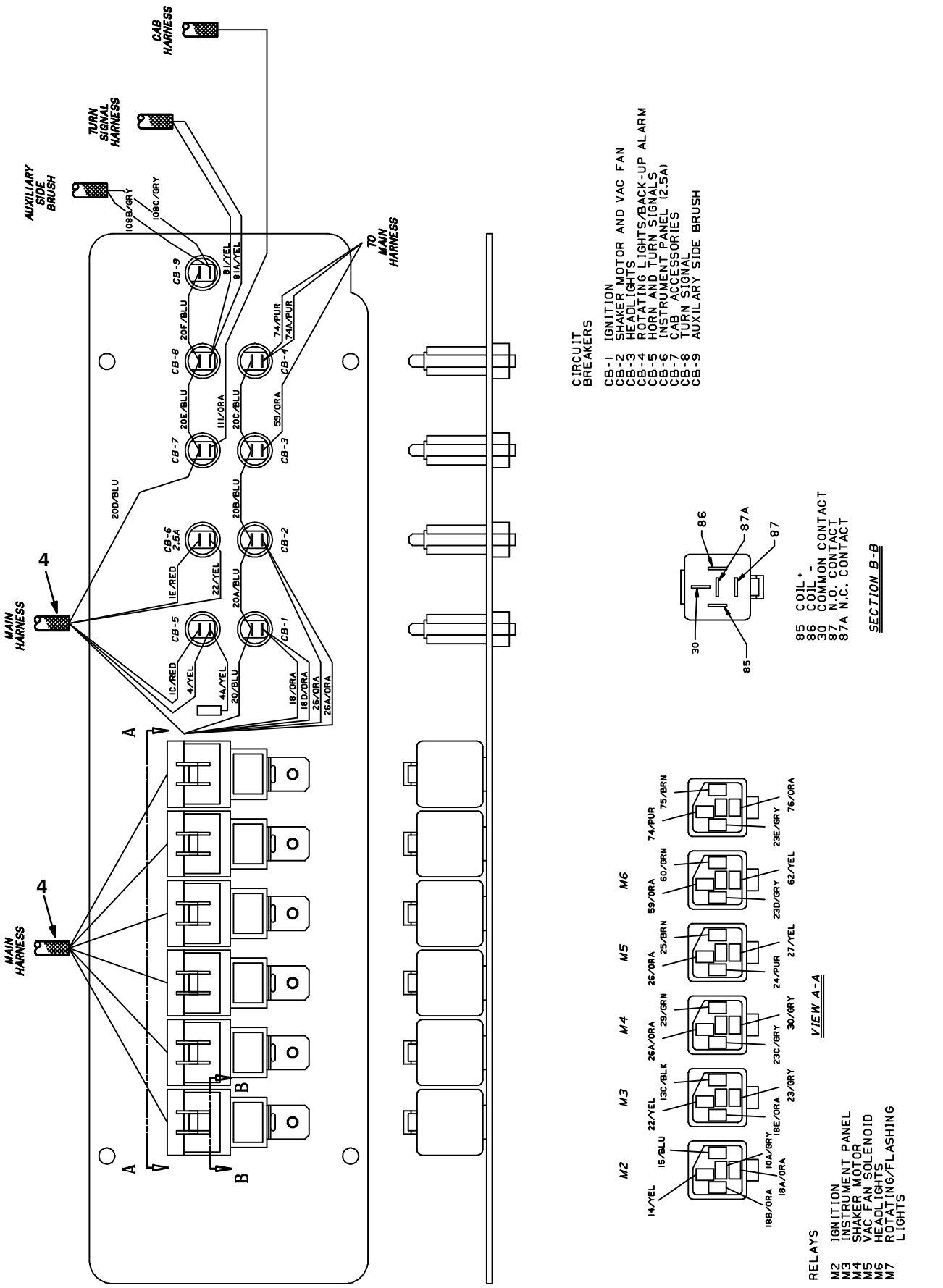

Home Find... Go To..

Fig. 59 - Wire Harnesses Group

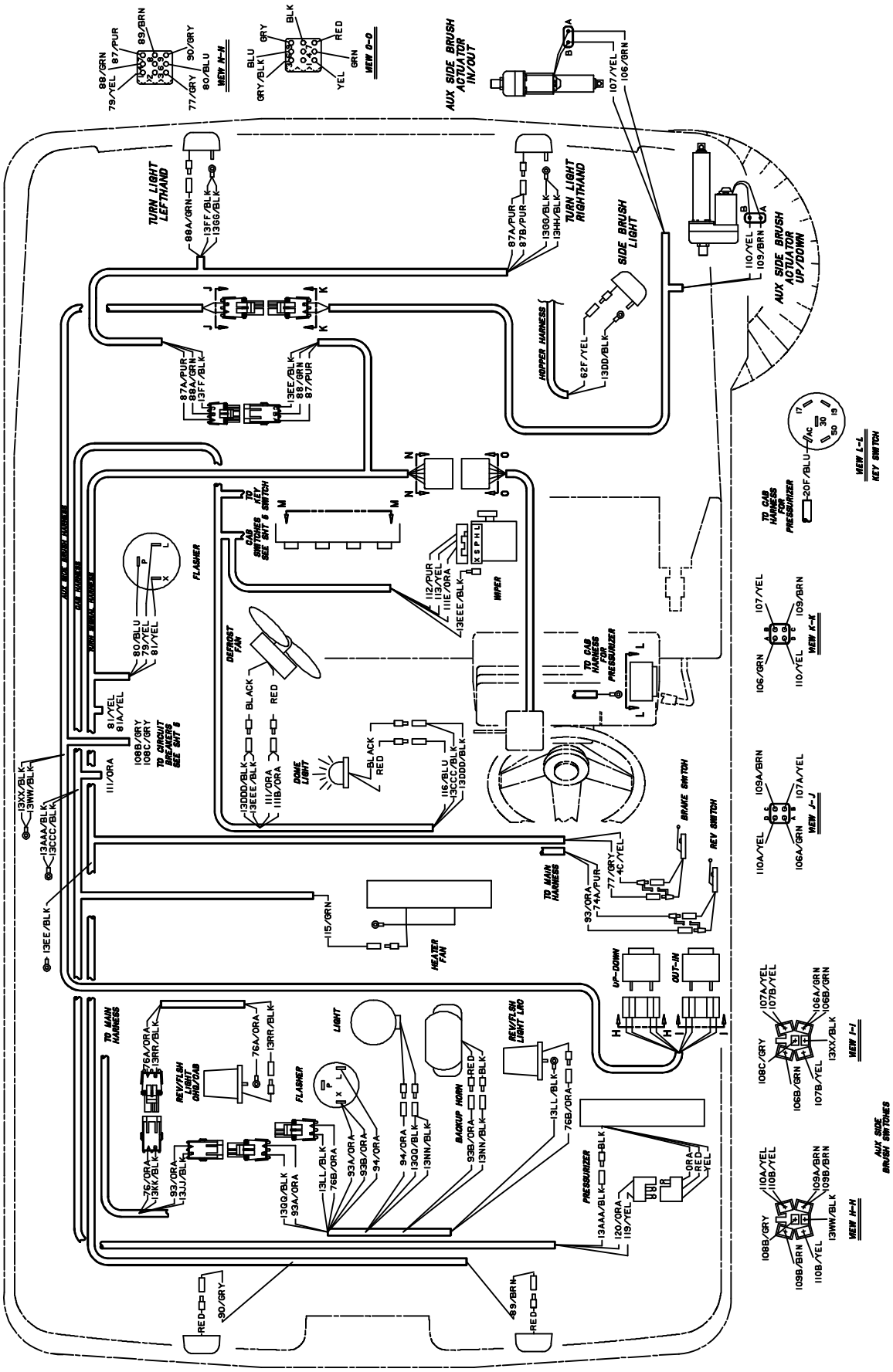

Fig. 59 - Wire Harnesses Group

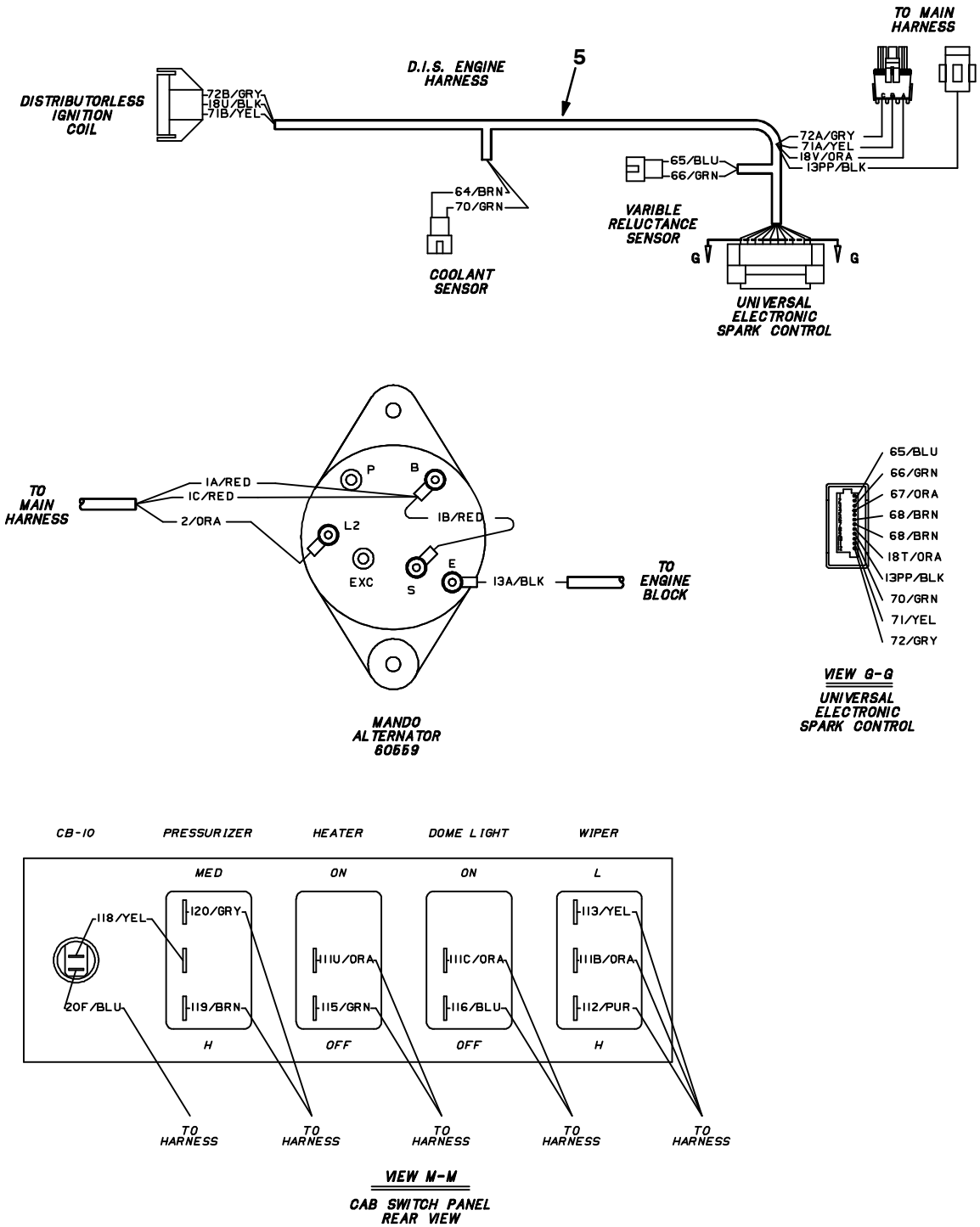

07923/07511

Ref.	Tennant Part No.	Machine Serial Number	Description	Qty.
1	60290	(000000-)	Harness, Horn	1
2	60282	(000000-)	Harness, Hopper	1
3	60278	(000000-)	Harness, Jumper	1
4	60280	(000000-)	Harness, Main, Gas/LPG 355L	1
5	60281	(000000-004097)	Harness, Engine 355L Gas & LPG	1
5	71459	(004098-)	Harness, Engine Vsg411/413	1
6	60296	(000000-)	Harness, Fuel, Gas/Die 355L	1

Fig. 60 - Label Group

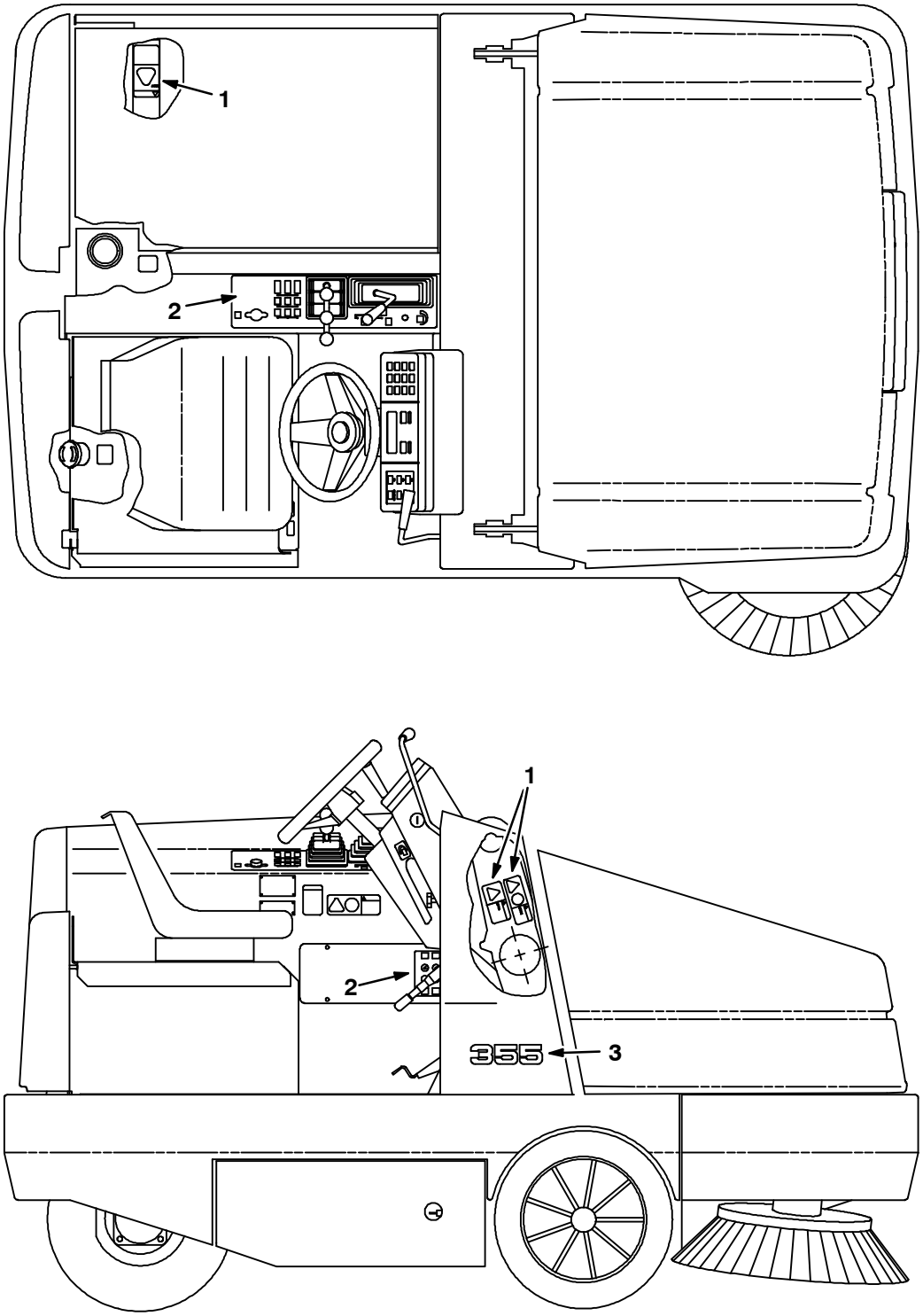

07861/07465

	Ref.	Tennant Part No.	Machine Serial Number	Description	Qty.
▽		59786	(000000-)	Label Kit, Complete, 355 Line	1
▲	1	59767	(000000-)	Label Set, Info & Hazard 355	1
▲	2	59768	(000000-)	Label Set, Operational 355	1
▲	3	59769	(000000-)	Label, Numerals 355	2

SECTION 3

CONTENTS PAGE

Fig. 1 – Signal Light Kit 3-2
Fig. 2 – Flashing Light Kit, Overhead Guard 3-4
Fig. 3 – Revolving Light Kit, Overhead Guard 3-5
Fig. 4 – Flashing Light Kit, LRC 3-6
Fig. 5 – Revolving Light Kit, LRC 3-7
Fig. 6 – Flashing Light Kit, Cab 3-8
Fig. 7 – Revolving Light Kit, Cab 3-9
Fig. 8 – Back-Up Alarm Kit, LRC 3-10
Fig. 9 – Back-Up Alarm Kit, Cab 3-12
Fig. 10 – Back-Up Alarm Kit, Cab with Pressurizer 3-14
Fig. 11 – Side Brush Light Kit 3-16
Fig. 12 – Overhead Guard Kit 3-17
Fig. 13 – Cab Insulation Group 3-18
Fig. 14 – Cab Frame and Windows Group 3-20
Fig. 15 – Cab Door Group 3-22
Fig. 16 – Cab Electrical and Wiper Group 3-24
Fig. 17 – Cab Pressurizer Kit 3-26
Fig. 18 – Cab Heater Kit 3-28
Fig. 19 – Blower Kit 3-30
Fig. 20 – Blower Kit, Overhead Guard 3-32
Fig. 21 – Vacuum Wand Kit 3-34
Fig. 22 – Side Brush Dust Control Kit 3-36
Fig. 23 – Side Brush Dust Control Kit 3-38
Fig. 24 – Seat Belt Kit 3-40
Fig. 25 – Protectoseal Fuel Tank Cap Group 3-41
Fig. 26 – Spark Arrest Muffler Group 3-42
Fig. 27 – Air Filter Safety Element Kit 3-43
Fig. 28 – Fire Extinguisher Kit 3-44
Fig. 29 – Battery Group, Dry (International Only) 3-45
Fig. 30 – Soft Ride Non-Marking Tire and Wheel Assembly 3-46
Fig. 31 – Soft Ride Tire and Wheel Assembly 3-47
Fig. 32 – Hi-Wear Tire and Wheel Assembly 3-48
Fig. 33 – Stainless Steel Hopper Group 3-49
Fig. 34 – Demo Group 3-50
Fig. 35 – Vacuumized Skirt Kit, Main Brush 3-51
Fig. 36 – Documentation Group 3-52

Fig. 1 – Signal Light Kit

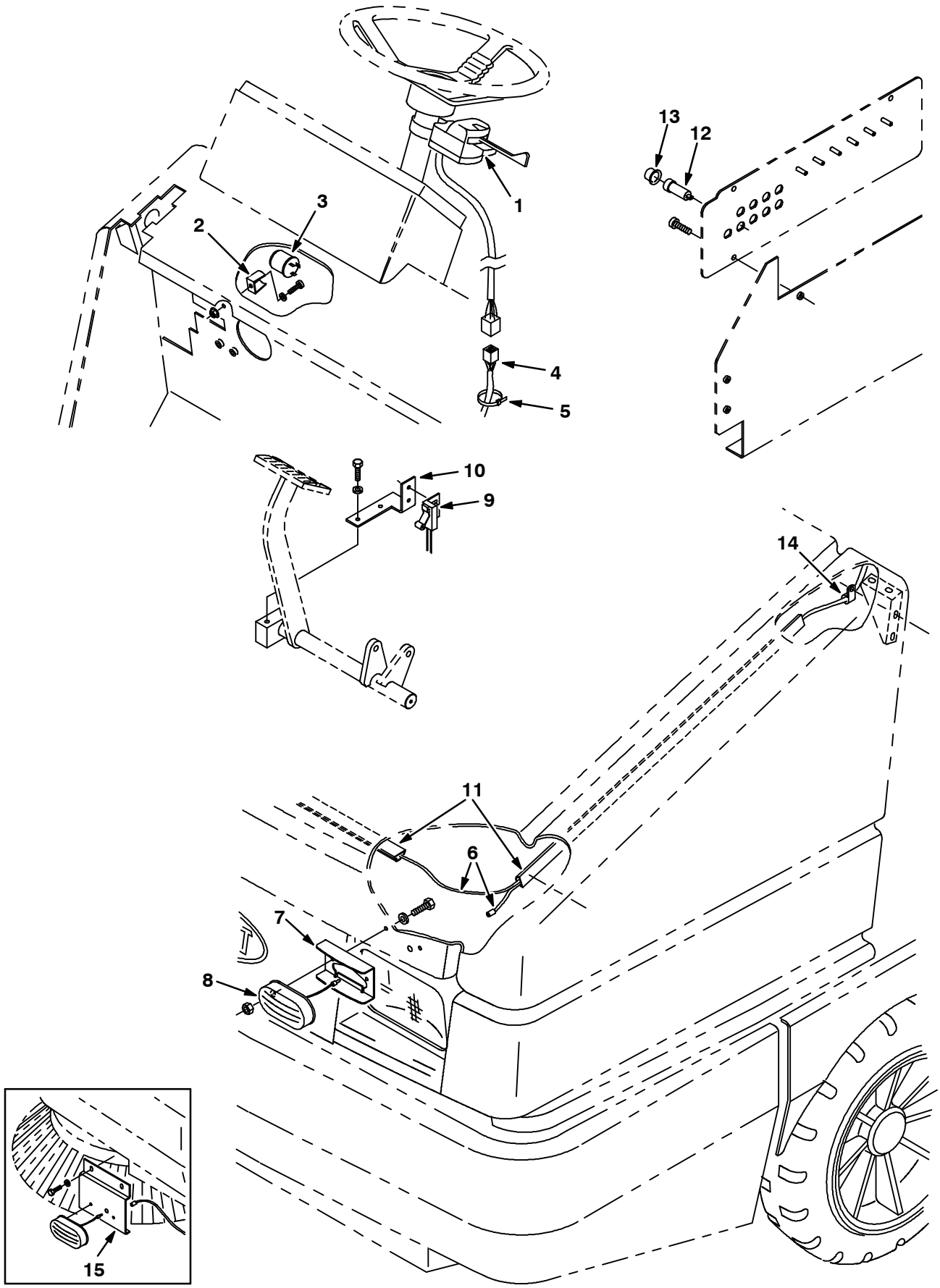

07875/07479

Fig. 1 - Signal Light Kit

	Ref.	Tennant Part No.	Machine Serial Number	Description	Qty.
∇		60305	(000000-)	Light Kit Sgnl 355L	1
▲∇	1	60751	(000000-)	Signal Assy Rework, E1740 Turn	1
▲▲		48570	(000000-)	Bulb #53 12V	1
▲	2	24576-1	(000000-)	Bracket, Flasher	1
▲	3	31922	(000000-)	Flasher, Heavy Duty	1
▲	4	60283	(000000-)	Harness, Turn Signal	1
▲	5	49266	(000000-)	Tie, Cable 1.75D Max 7.50Lg	12
▲	6	60284	(000000-)	Harness, Turn Signal	1
▲	7	72178	(000000-)	Bracket, Light, SBDC	2
▲∇	8	34848	(000000-)	Light Assy Mark/Yel 12V- . A	2
▲▲		87948	(000000-)	Bulb, #194	1
▲	9	59962	(000000-)	Switch Assy, Roller	1
▲	10	59920	(000000-)	Bracket, Switch	1
▲	11	86332	(000000-)	Duct, Vinyl .40x.75x26.0 Lg .25D	2
▲	12	57803	(000000-)	Circuit Breaker, 15 Resetbl	1
▲	13	57751	(000000-)	Boot - Circuit Breaker	1
▲	14	40678	(000000-)	Clamp, Cable .44D .62 Wide	1
	15	58308	(000000-xxxxxx)	Bracket, Bumper Stop	2

Fig. 2 - Flashing Light Kit, Overhead Guard

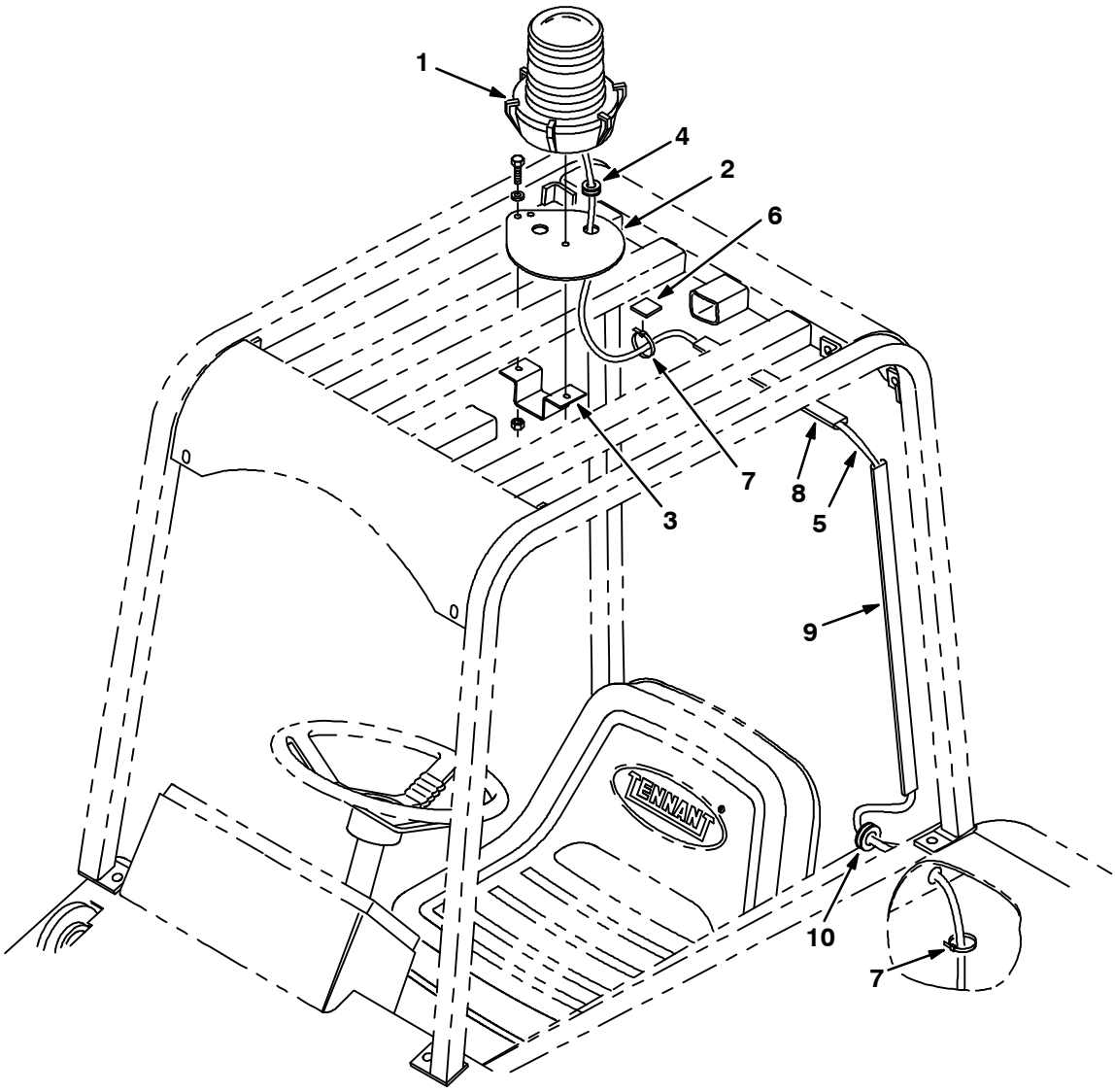

07870/07474

	Ref.	Tennant Part No.	Machine Serial Number	Description	Qty.
▽		60307	(000000-)	Light Kit Flsh 355L Ohg	1
▲▽	1	82063	(000000-)	Light, Flashing, Amber, 12V-Re	1
▲▲		58520	(000000-)	Lens,Flashing Lite Fr207 Amber	1
▲▲		45779	(000000-)	Bulb, General Electric	1
▲	2	57220	(000000-)	Plate, Light Mtg.	1
▲	3	59447	(000000-)	Bracket, Mtg, Light, Ohg	1
▲	4	10632-2	(000000-)	Grommet,Rbr,0.63Id,For .13Matl	1
▲	5	60288	(000000-)	Harness, Revolv Light, Cab,Ohg	1
▲	6	55248	(000000-)	Cabletie Mount, Adhesive	5
▲	7	49266	(000000-)	Tie, Cable 1.75D Max 7.50Lg	8
▲	8	86330	(000000-)	Duct, Vinyl 10.0 In	2
▲	9	86332	(000000-)	Duct, Vinyl 26.0 In.	1
▲		72114	(000000-)	Duct, Vinyl 6.0 In.	1
▲	10	10632-18	(000000-)	Grommet, Rbr, 0.69 ID	1
		58518	(000000-)	Lens,Flashing Lite Fr207 Red	1
		58519	(000000-)	Lens,Flashing Lite Fr207 Blue	1

Fig. 3 – Revolving Light Kit, Overhead Guard

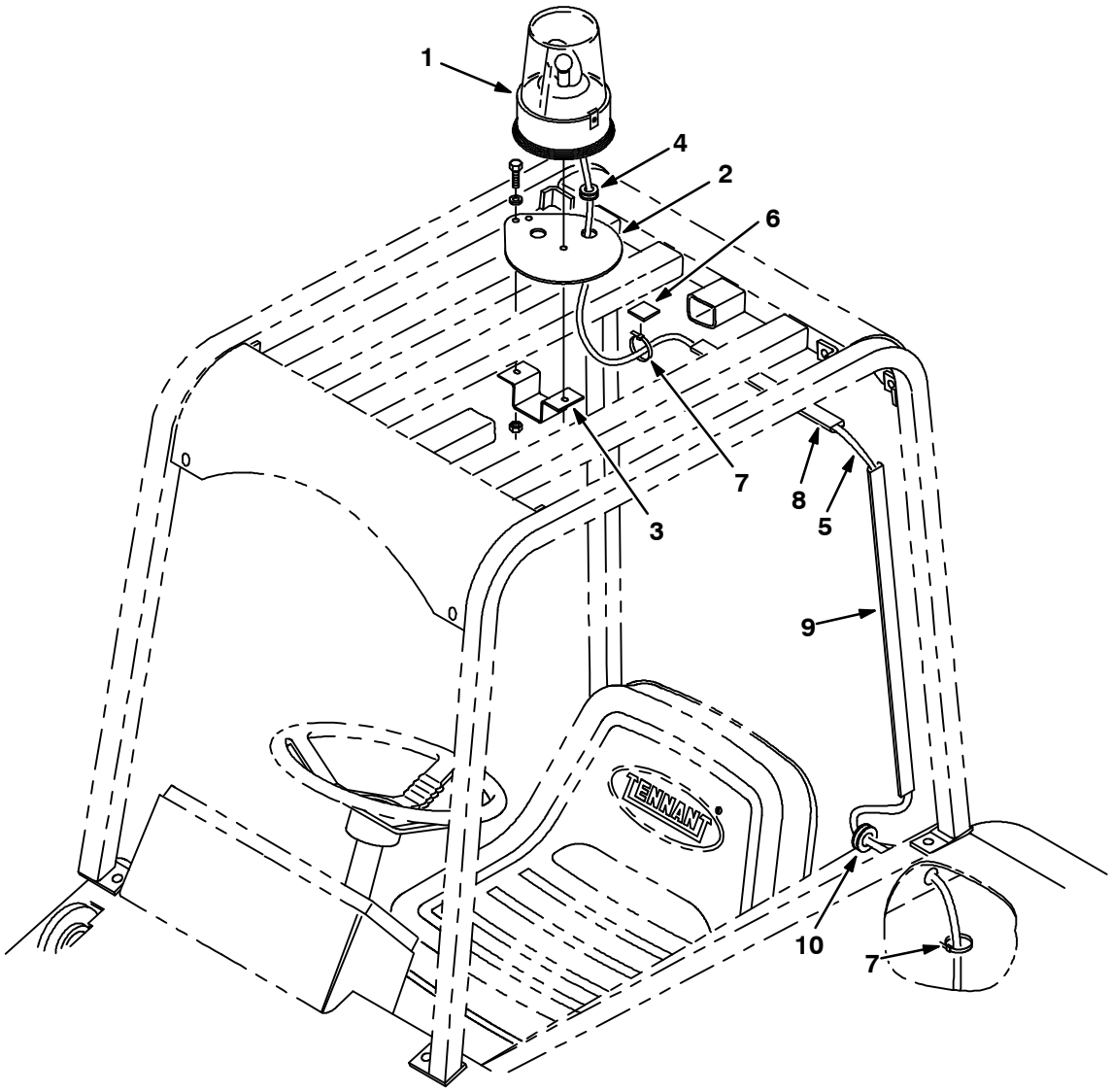

07866/07470

	Ref.	Tennant Part No.	Machine Serial Number	Description	Qty.
▽		60309	(000000–)	Light Kit Revl 355L Ohg	1
▲▽	1	82200	(000000–)	Light,Rev.Amber 12V–Reworked	1
▲▲		44681–1	(000000–)	Lens,Rev.Light,Amber	1
▲▲		45779	(000000–)	Bulb, General Electric	1
▲	2	57220	(000000–)	Plate, Light Mtg.	1
▲	3	59447	(000000–)	Bracket, Mtg, Light, Ohg	1
▲	4	10632–2	(000000–)	Grommet,Rbr,0.63Id,For .13Matl	1
▲	5	60288	(000000–)	Harness, Revolv Light, Cab,Ohg	1
▲	6	55248	(000000–)	Cabletie Mount, Adhesive	5
▲	7	49266	(000000–)	Tie, Cable 1.75D Max 7.50Lg	8
▲	8	86330	(000000–)	Duct, Vinyl 10.0 In.	2
▲	9	86332	(000000–)	Duct, Vinyl 26.0 In.	1
▲		72114	(000000–)	Duct, Vinyl 6.0 In.	1
▲	10	10632–18	(000000–)	Grommet, Rbr, 0.69 ID	1
		44681	(000000–)	Lens,Rev.Light,Red	1
		44681–2	(000000–)	Lens,Rev.Light,Blue	1

Fig. 4 - Flashing Light Kit, LRC

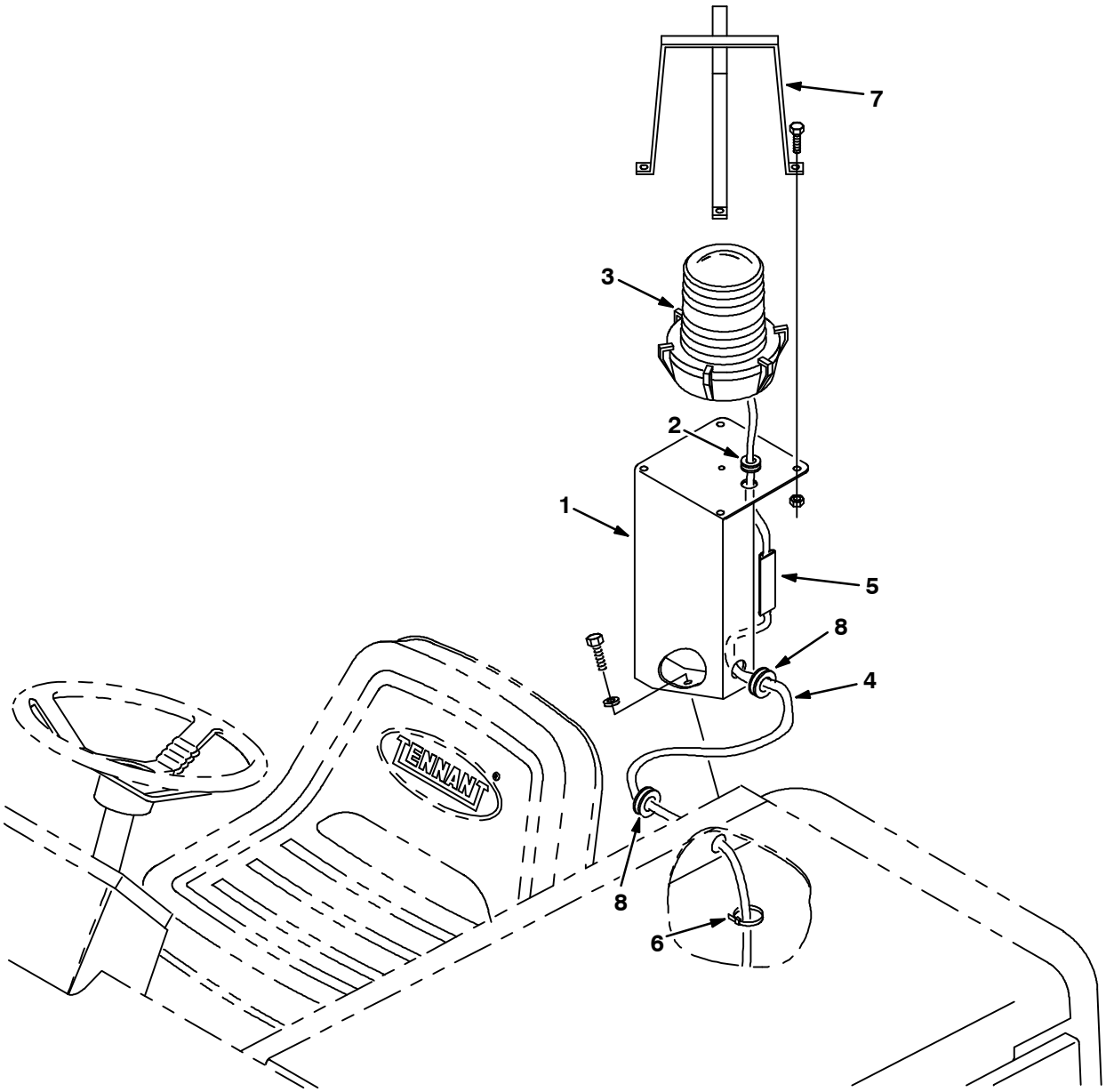

07873/07477

	Ref.	Tennant Part No.	Machine Serial Number	Description	Qty.
∇		60312	(000000-)	Light Kit Flsh 355L Lrc	1
▲	1	72100	(000000-)	Bracket Wldt, Light, Rotating	1
▲	2	10632-9	(000000-)	Grommet,Rbr,0.56Id,For .13Matl	1
▲∇	3	82063	(000000-)	Light, Flashing, Amber, 12V-Re	1
▲▲		58520	(000000-)	Lens,Flashing Lite Fr207 Amber	1
▲▲		45779	(000000-)	Bulb, General Electric	1
▲	4	71543	(000000-)	Harness, Wire, Hazard	1
▲	5	86333	(000000-)	Duct, Vinyl 3.5 In.	1
▲	6	49266	(000000-)	Tie, Cable 1.75D Max 7.50Lg	6
▲	7	45272	(000000-)	Guard Wldt, Lights, Revl&Flsh	1
▲	8	10632-18	(000000-)	Grommet, Rbr, 0.69 ID	2
		58518	(000000-)	Lens,Flashing Lite Fr207 Red	1
		58519	(000000-)	Lens,Flashing Lite Fr207 Blue	1

Fig. 5 - Revolving Light Kit, LRC

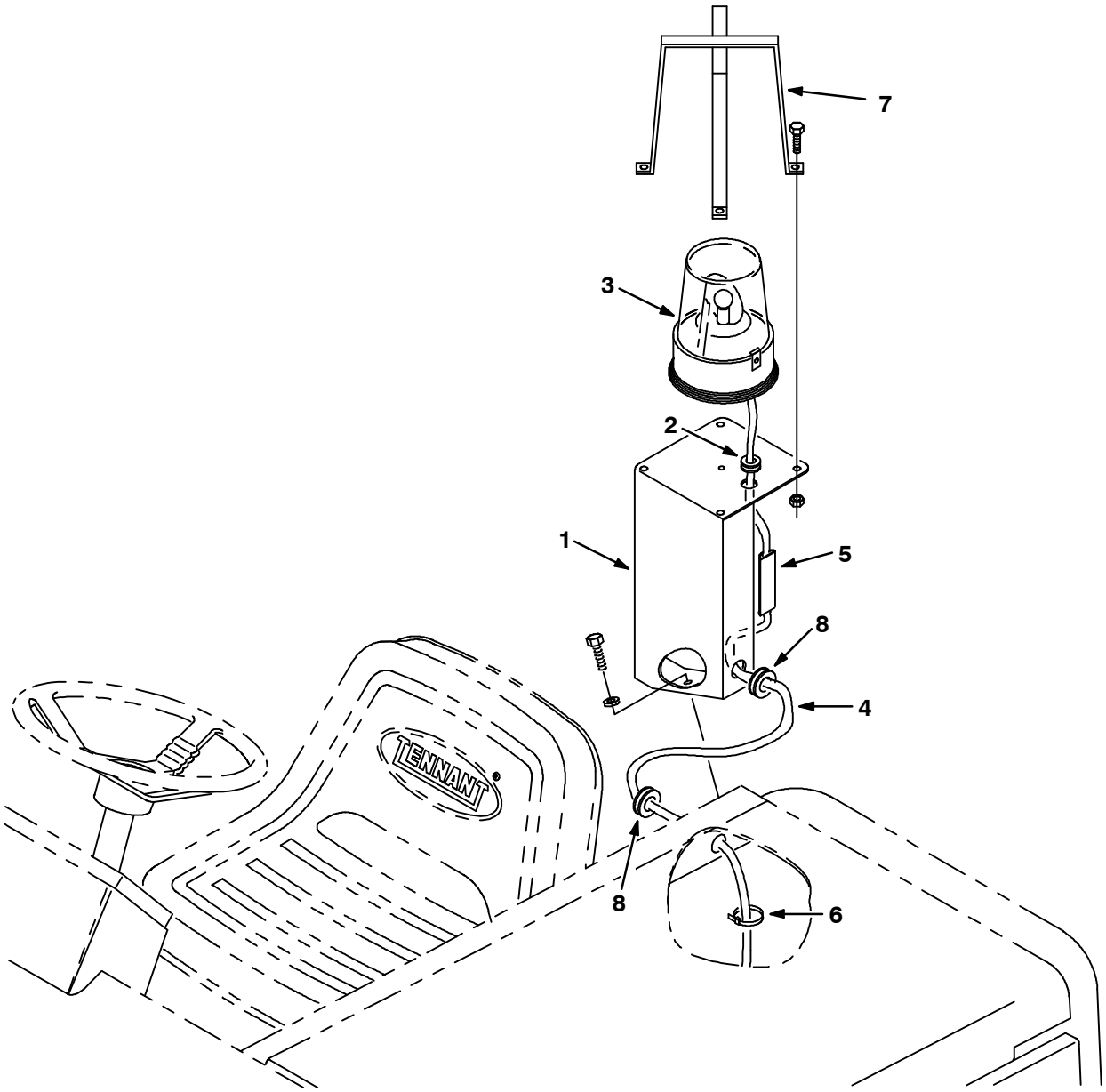

07869/07473

	Ref.	Tennant Part No.	Machine Serial Number	Description	Qty.
∇		60314	(000000-)	Light Kit Revl 355L Lrc	1
▲	1	72100	(000000-)	Bracket Wldt, Light, Rotating	1
▲	2	10632-9	(000000-)	Grommet,Rbr,0.56Id,For .13Matl	1
▲∇	3	82200	(000000-)	Light,Rev.Amber 12V-Reworked	1
▲▲		44681-1	(000000-)	Lens,Rev.Light,Amber	1
▲▲		45779	(000000-)	Bulb, General Electric	1
▲	4	71543	(000000-)	Harness, Wire, Hazard	1
▲	5	86333	(000000-)	Duct, Vinyl 3.5 In.	1
▲	6	49266	(000000-)	Tie, Cable 1.75D Max 7.50Lg	6
▲	7	45272	(000000-)	Guard Wldt, Lights, Revl&Flsh	1
▲	8	10632-18	(000000-)	Grommet, Rbr, 0.69 ID	2
		44681	(000000-)	Lens,Rev.Light,Red	1
		44681-2	(000000-)	Lens,Rev.Light,Blue	1

Fig. 6 - Flashing Light Kit, Cab

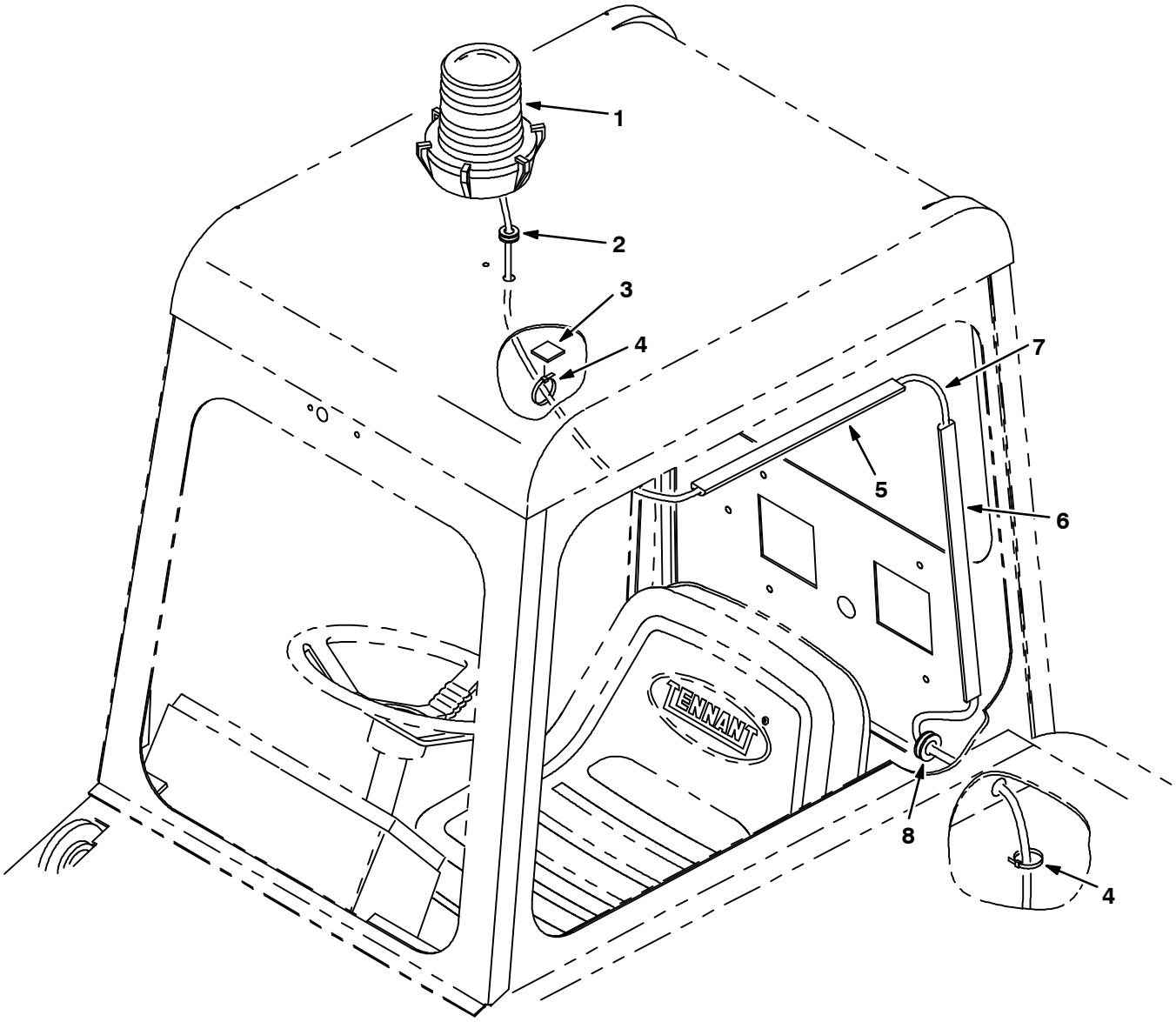

07871/07475

	Ref.	Tennant Part No.	Machine Serial Number	Description	Qty.
∇		60316	(000000-)	Light Kit Flsh 355L Cab	1
▲∇	1	82063	(000000-)	Light, Flashing, Amber, 12V-Re	1
▲▲		58520	(000000-)	Lens,Flashing Lite Fr207 Amber	1
▲▲		45779	(000000-)	Bulb, General Electric	1
▲	2	10632-9	(000000-)	Grommet,Rbr, 0.56 In	1
▲	3	55248	(000000-)	Cabletie Mount, Adhesive	4
▲	4	49266	(000000-)	Tie, Cable 1.75D Max 7.50Lg	4
▲	5	86331	(000000-)	Duct, Vinyl 16.0 In.	1
▲	6	86332	(000000-)	Duct, Vinyl 26.0 In.	1
▲	7	60288	(000000-)	Harness, Revolv Light, Cab,Ohg	1
▲	8	10632-18	(000000-)	Grommet, Rbr, 0.69 ID	1
		58518	(000000-)	Lens,Flashing Lite Fr207 Red	1
		58519	(000000-)	Lens,Flashing Lite Fr207 Blue	1

Fig. 7 - Revolving Light Kit, Cab

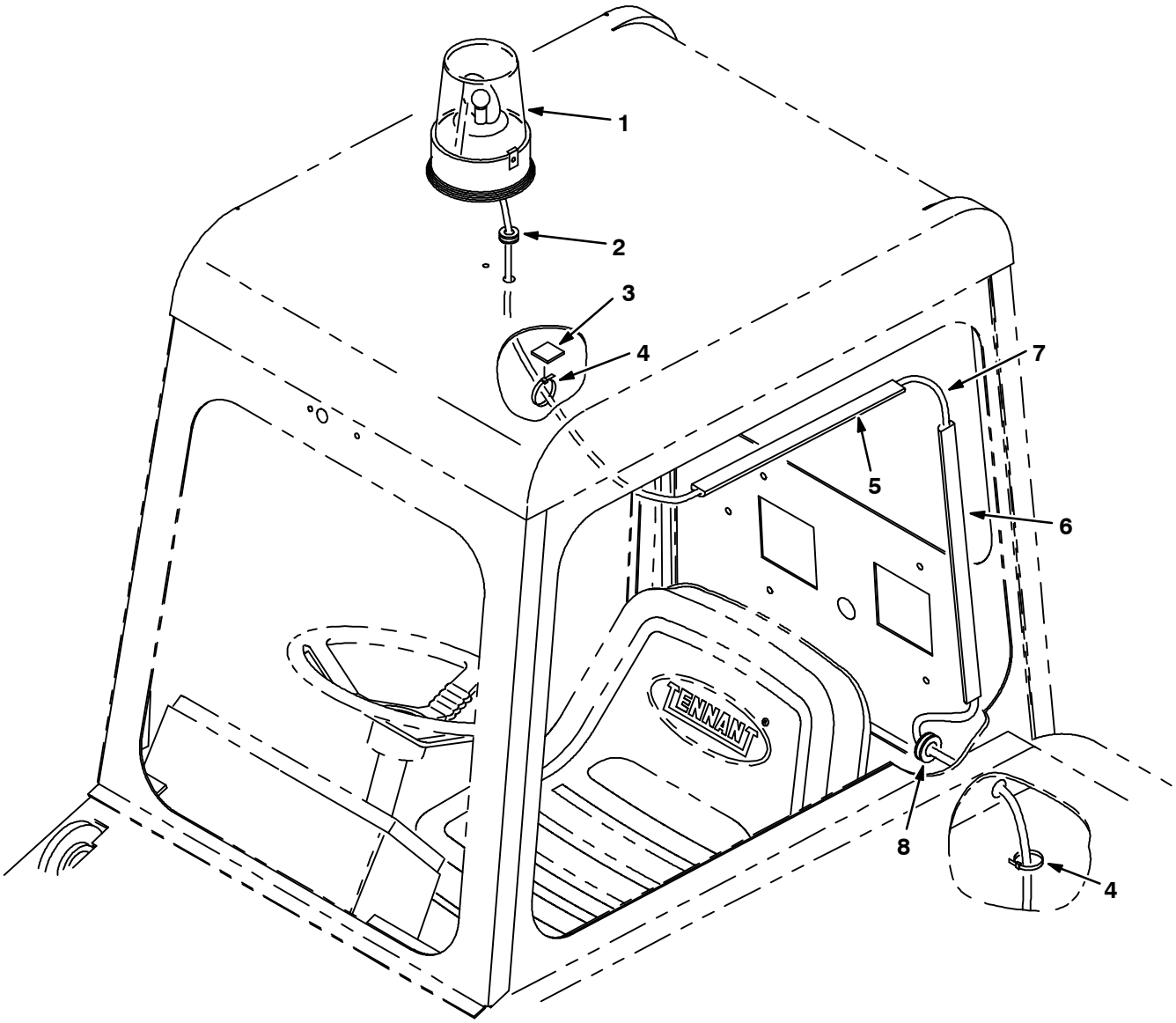

07872/07476

	Ref.	Tennant Part No.	Machine Serial Number	Description	Qty.
▽		60318	(000000-)	Light Kit Revl 355L Cab	1
▲▽	1	82200	(000000-)	Light,Rev.Amber 12V-Reworked	1
▲▲		44681-1	(000000-)	Lens,Rev.Light,Amber	1
▲▲		45779	(000000-)	Bulb, General Electric	1
▲	2	10632-9	(000000-)	Grommet,Rbr, 0.56 In	1
▲	3	55248	(000000-)	Cabletie Mount, Adhesive	4
▲	4	49266	(000000-)	Tie, Cable 1.75D Max 7.50Lg	4
▲	5	86331	(000000-)	Duct, Vinyl 16.0 In.	1
▲	6	86332	(000000-)	Duct, Vinyl 26.0 In.	1
▲	7	60288	(000000-)	Harness, Revolv Light, Cab,Ohg	1
▲	8	10632-18	(000000-)	Grommet, Rbr, 0.69 ID	1
		44681	(000000-)	Lens,Rev.Light,Red	1
		44681-2	(000000-)	Lens,Rev.Light,Blue	1

Fig. 8 - Back-Up Alarm Kit, LRC

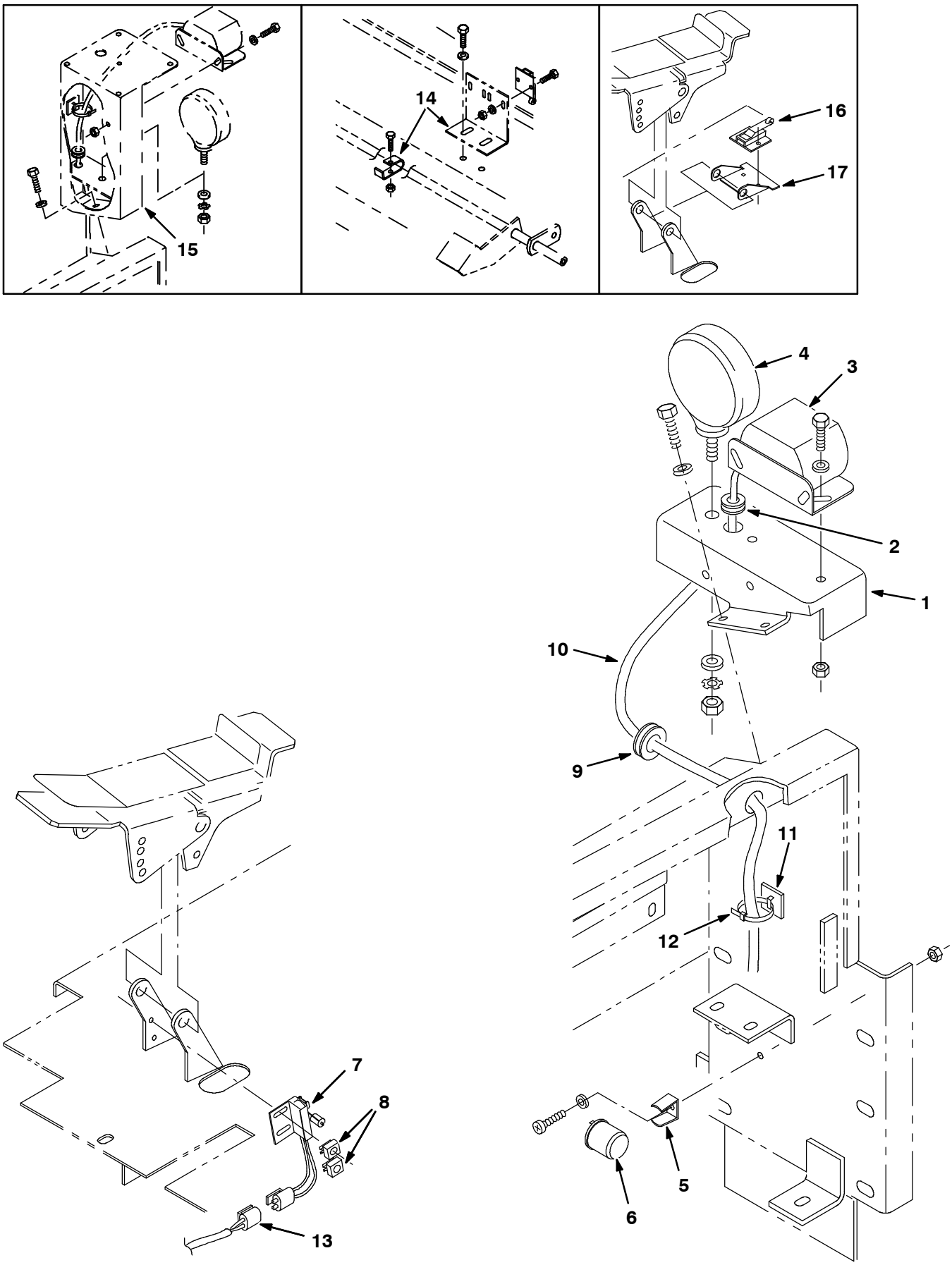

07874/07478

Fig. 8 - Back-Up Alarm Kit , LRC

	Ref.	Tennant Part No.	Machine Serial Number	Description	Qty.
∇		59395	(000000-)	Alarm Kit, Bu A/v 355L	1
▲	1	71056	(001175-)	Bracket, Mtg, Back-Up Alarm	1
▲	2	10632-9	(000000-)	Grommet,Rbr, 0.56 In	1
▲	3	61920	(000000-)	Horn Assy, Back-Up Alarm	1
▲∇	4	36438	(000000-)	Headlight Assy,210G	1
▲▲		36439	(000000-)	Bulb, 12V .9A 15Cp#1004	1
▲	5	24576-1	(000000-)	Bracket, Flasher	1
▲	6	24576	(000000-)	Flasher, 12V	1
▲	7	23211	(003189-)	Switch Assy, Roller	1
▲	8	23210	(003189-)	Nut Speed, Retainer, 8-32 Thd	2
▲	9	10632-18	(001175-)	Grommet, Rbr, 0.69 ID	1
▲	10	71544	(000000-)	Harness, Alarm, Backup	1
▲	11	55248	(000000-)	Cabletie Mount, Adhesive	2
▲	12	49266	(000000-)	Tie, Cable 1.75D Max 7.50Lg	5
▲	13	70159	(003189-)	Harness, Adapter, B/u Alarm	1
	14	72106	(000000-001137)	Bracket Repl Kit, Switch	1
	15	59944	(000000-001174)	Bracket Wldt, Light, Rotating	1
	16	35905	(000000-003188)	Switch, Waterproof, 10A	1
	17	23231	(001138-003188)	Repl. Kit, Backup Switch	1

Fig. 9 - Back-Up Alarm Kit, Cab

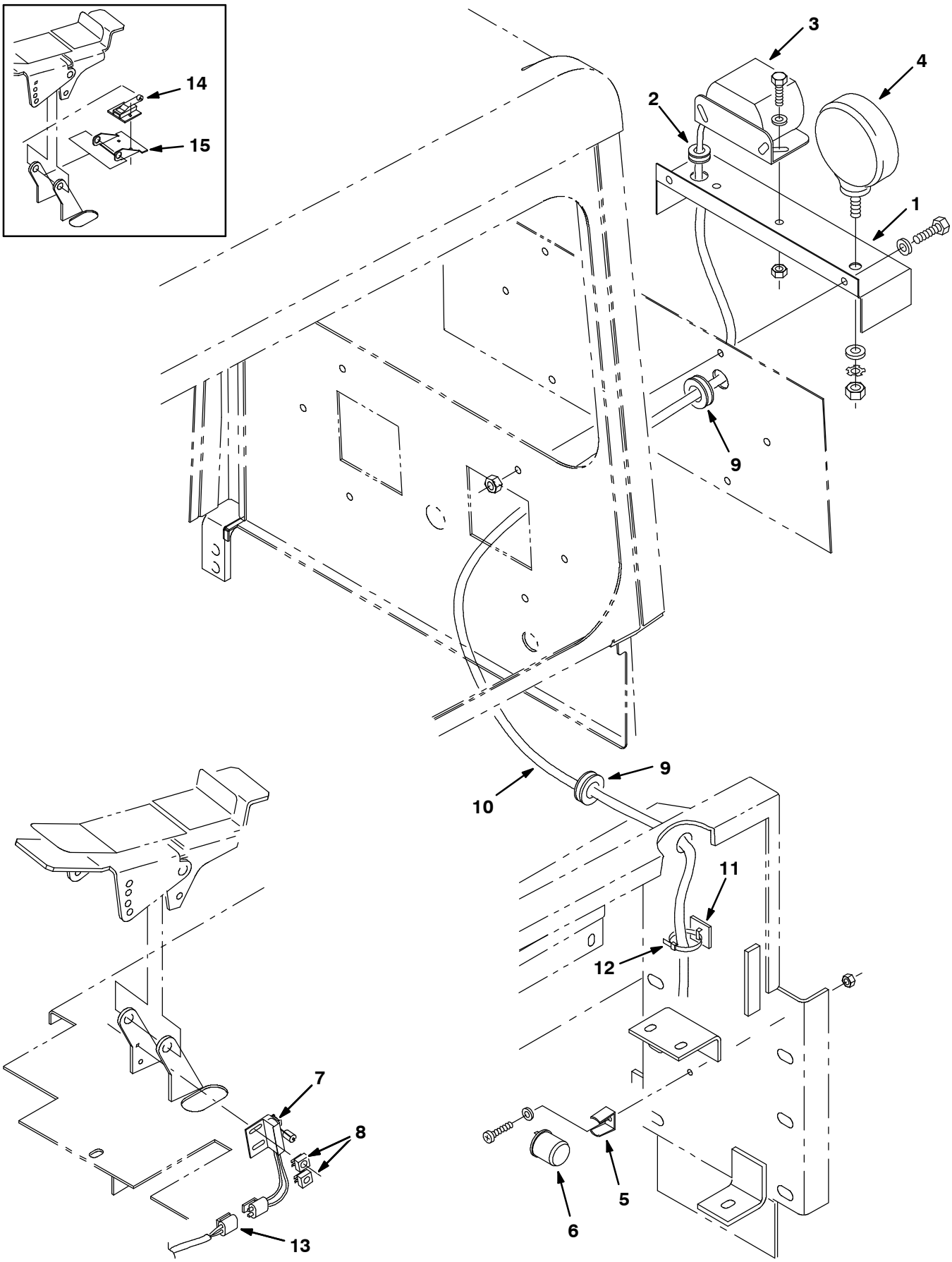

07958/07957

Fig. 9 - Back-Up Alarm Kit, Cab

	Ref.	Tennant Part No.	Machine Serial Number	Description	Qty.
∇		72096	(000000-)	Alarm Kit, Bu A/v 355L, Cab	1
▲	1	71058	(000000-)	Bracket, Alarm, Back-Up	1
▲	2	10632-9	(000000-)	Grommet,Rbr, 0.56 In	1
▲	3	61920	(000000-)	Horn Assy, Back-Up Alarm	1
▲∇	4	36438	(000000-)	Headlight Assy,210G	1
▲▲		36439	(000000-)	Bulb, 12V .9A 15Cp#1004	1
▲	5	24576-1	(000000-)	Bracket, Flasher	1
▲	6	24576	(000000-)	Flasher, 12V	1
▲	7	23211	(003189-)	Switch Assy, Roller	1
▲	8	23210	(003189-)	Nut Speed, Retainer, 8-32 Thd	2
▲	9	10632-18	(000000-)	Grommet, Rbr, 0.69 ID	2
▲	10	71544	(000000-)	Harness, Alarm, Backup	1
▲	11	55248	(000000-)	Cabletie Mount, Adhesive	2
▲	12	49266	(000000-)	Tie, Cable 1.75D Max 7.50Lg	5
▲	13	70159	(003189-)	Harness, Adapter, B/u Alarm	1
	14	35905	(000000-003188)	Switch, Waterproof, 10A	1
	15	23231	(000000-003188)	Repl. Kit, Backup Switch	1

Fig. 10 - Back-Up Alarm Kit, Cab with Pressurizer

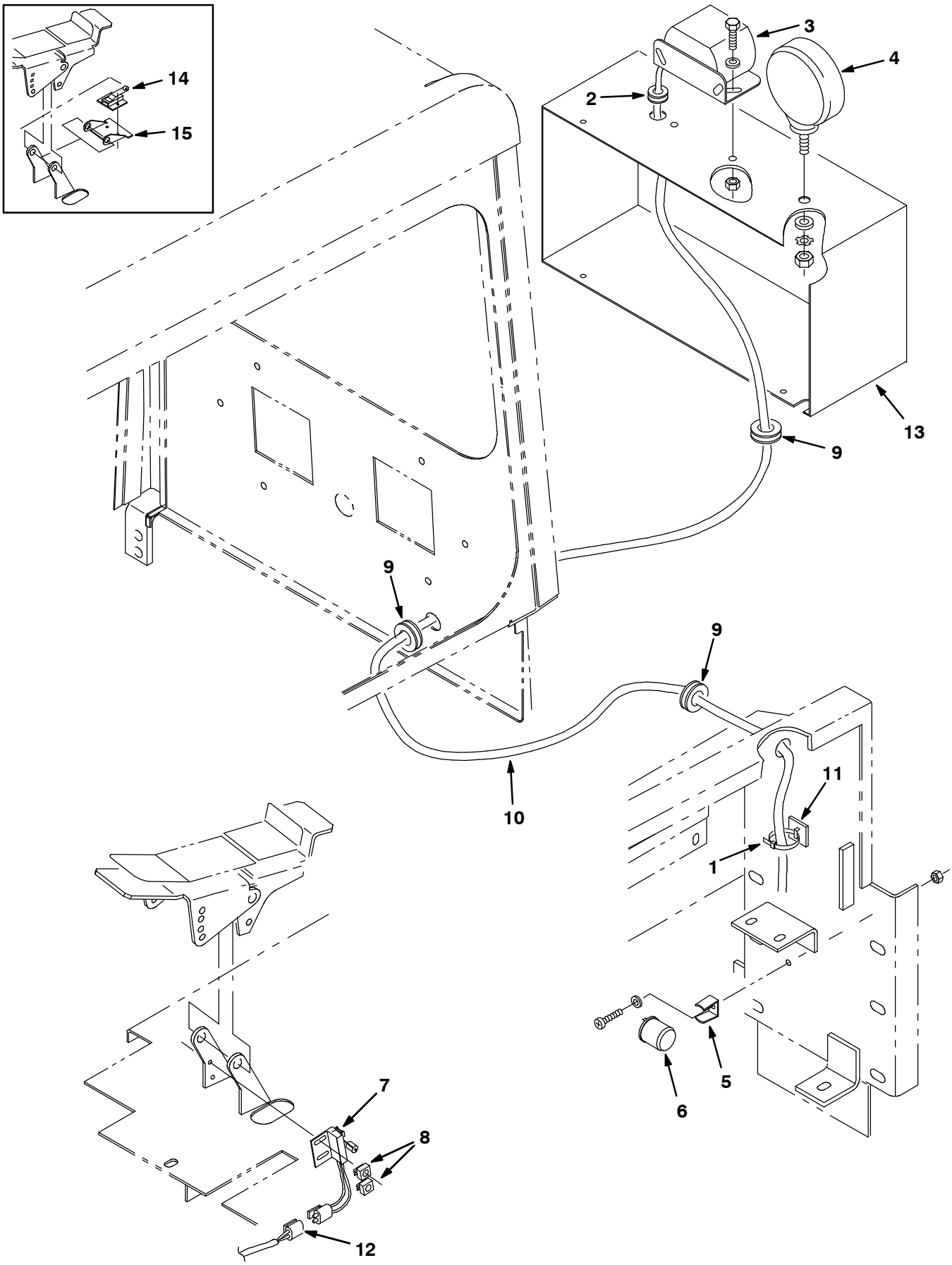

07956/07955

Fig. 10 - Back-Up Alarm Kit, Cab with Pressurizer

	Ref.	Tennant Part No.	Machine Serial Number	Description	Qty.
∇		72094	(000000-)	Alarm Kit, Bu A/v 355L, Cab with Pressurizer	1
▲	1	49266	(000000-)	Tie, Cable 1.75D Max 7.50Lg	5
▲	2	10632-9	(000000-)	Grommet,Rbr, 0.56 In	1
▲	3	61920	(000000-)	Horn Assy, Back-Up Alarm	1
▲∇	4	36438	(000000-)	Headlight Assy,210G	1
▲▲		36439	(000000-)	Bulb, 12V .9A 15Cp#1004	1
▲	5	24576-1	(000000-)	Bracket, Flasher	1
▲	6	24576	(000000-)	Flasher, 12V	1
▲	7	23211	(003189-)	Switch Assy, Roller	1
▲	8	23210	(003189-)	Nut Speed, Retainer, 8-32 Thd	2
▲	9	10632-18	(000000-)	Grommet, Rbr, 0.69 ID	3
▲	10	71544	(000000-)	Harness, Alarm, Backup	1
▲	11	55248	(000000-)	Cabletie Mount, Adhesive	2
▲	12	70159	(003189-)	Harness, Adapter, B/u Alarm	1
	13	72080	(000000-)	Cover Wldt, Press & Alarm	1
	14	35905	(000000-003188)	Switch, Waterproof, 10A	1
	15	23231	(000000-003188)	Repl. Kit, Backup Switch	1

Fig. 11 - Side Brush Light Kit

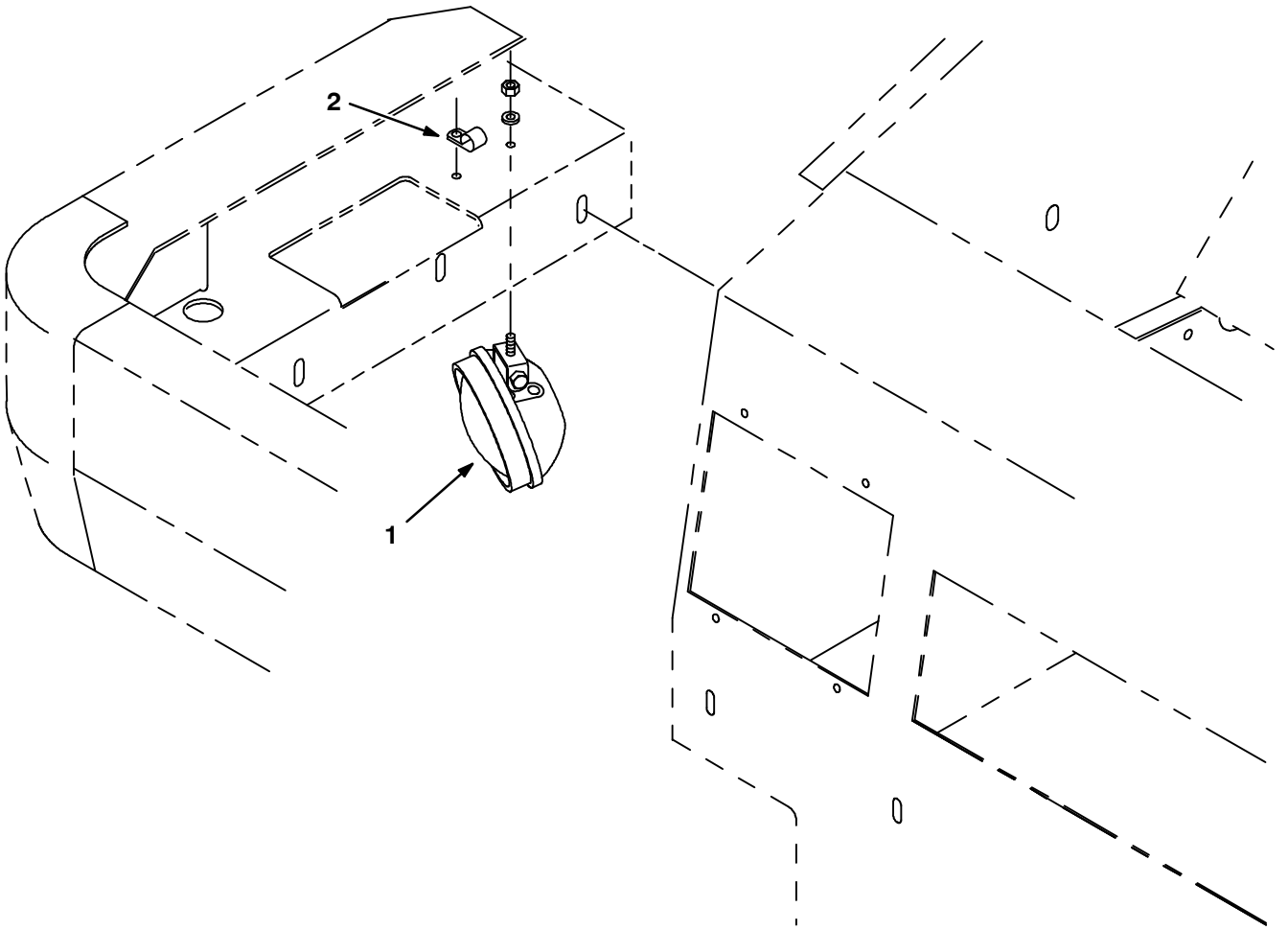

07930/07514

	Ref.	Tennant Part No.	Machine Serial Number	Description	Qty.
∇		60372	(000000-)	Light Kit, Side Brush 355L	1
▲∇	1	19827	(000000-)	Light Assy Work/Clr 12V- . A	1
▲▲		51570	(000000-)	Bulb GE	1
▲	2	40678	(000000-)	Clamp, Cable .44D .62Wide	1

Fig. 12 - Overhead Guard Kit

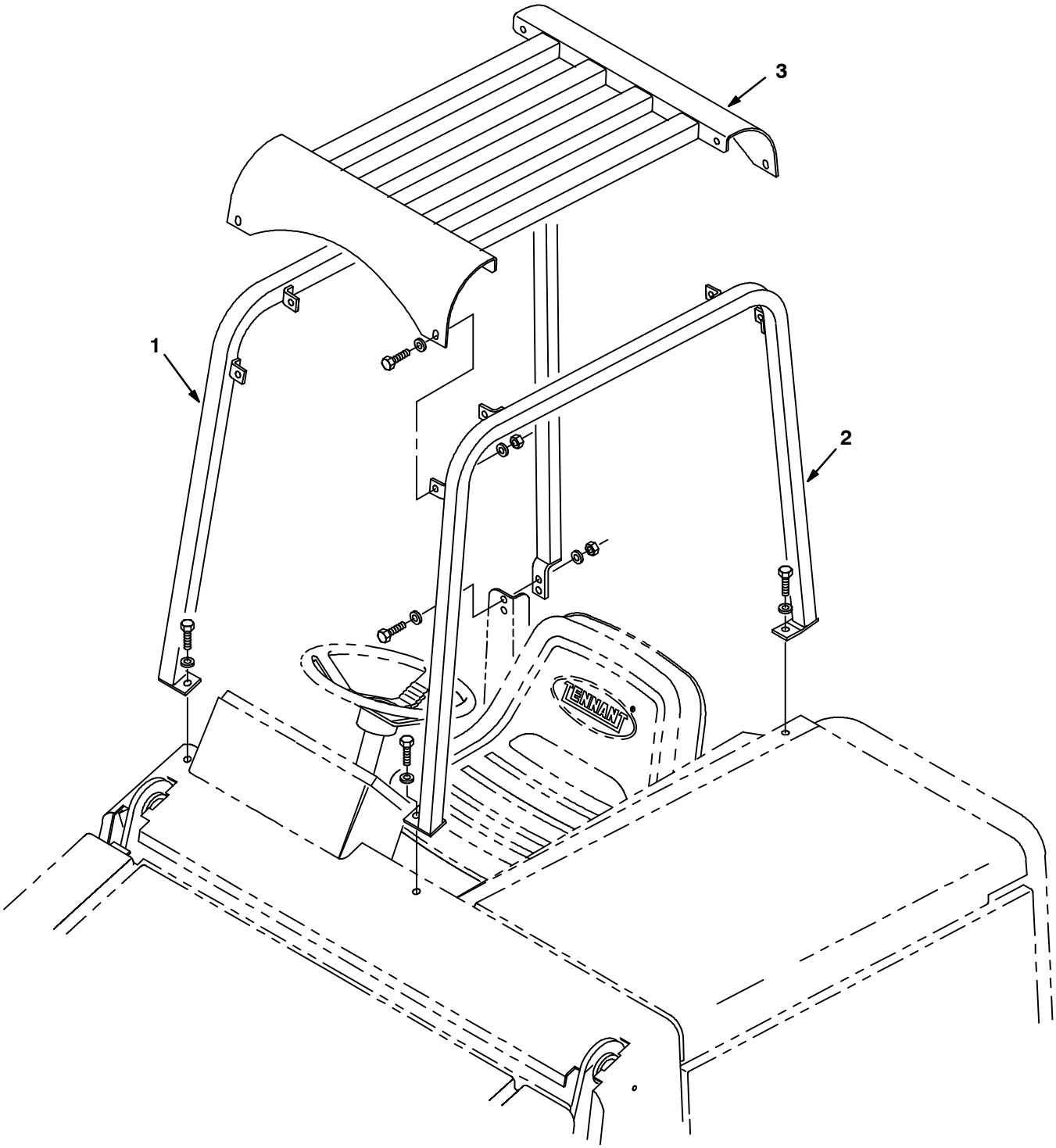

07865/07469

	Ref.	Tennant Part No.	Machine Serial Number	Description	Qty.
▽		56595	(000000-)	Guard Kit, 355L	1
▲	1	59665	(000000-)	Tube Wldt, Leg, Ohg,Rh,Painted	1
▲	2	59666	(000000-)	Tube Wldt, Leg,Ohg,Lh,Painted	1
▲	3	56456	(000000-)	Guard Wldt, Ohg, Top	1

Fig. 13 – Cab Insulation Group

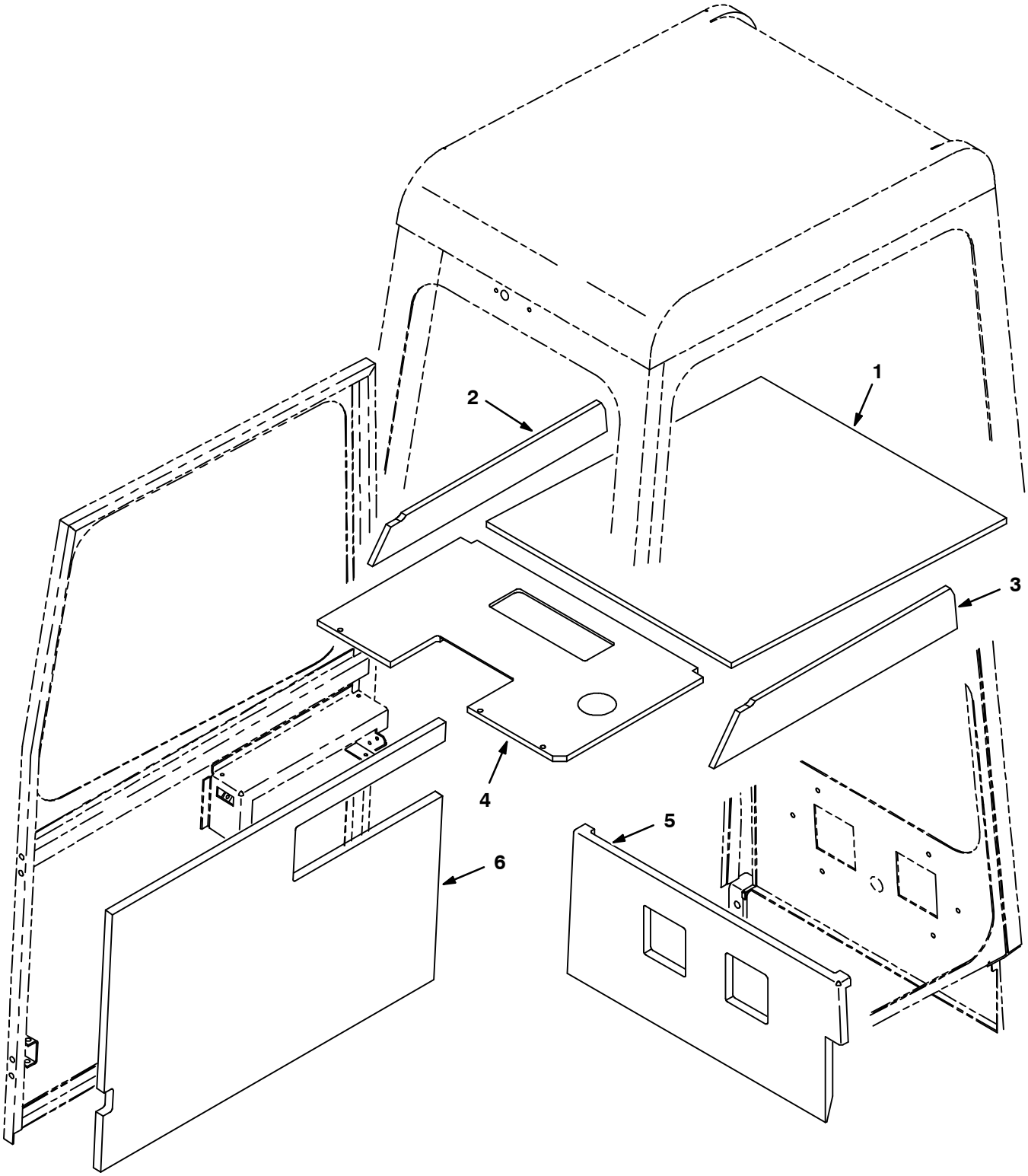

07880/07484

Fig. 13 - Cab Insulation Group

NOTE: Cab Kit, TENNANT Part Number 59511, includes Fig. 13, Fig. 14, Fig. 15, and Fig. 16.

Ref.	Tennant Part No.	Machine Serial Number	Description	Qty.
1	55073	(000000–)	Insulation,S/Foam,Roof	1
2	55074	(000000–)	Insulation,S/Foam,Side Rh	1
3	55161	(000000–)	Insulation,S/Foam,Side Lh	1
4	55162	(000000–)	Insulation,S/Foam,Panel	1
5	55163	(000000–)	Insulation,S/Foam Rear	1
6	55164	(000000–)	Insulation,S/Foam Door	1

Fig. 14 - Cab Frame and Windows Group

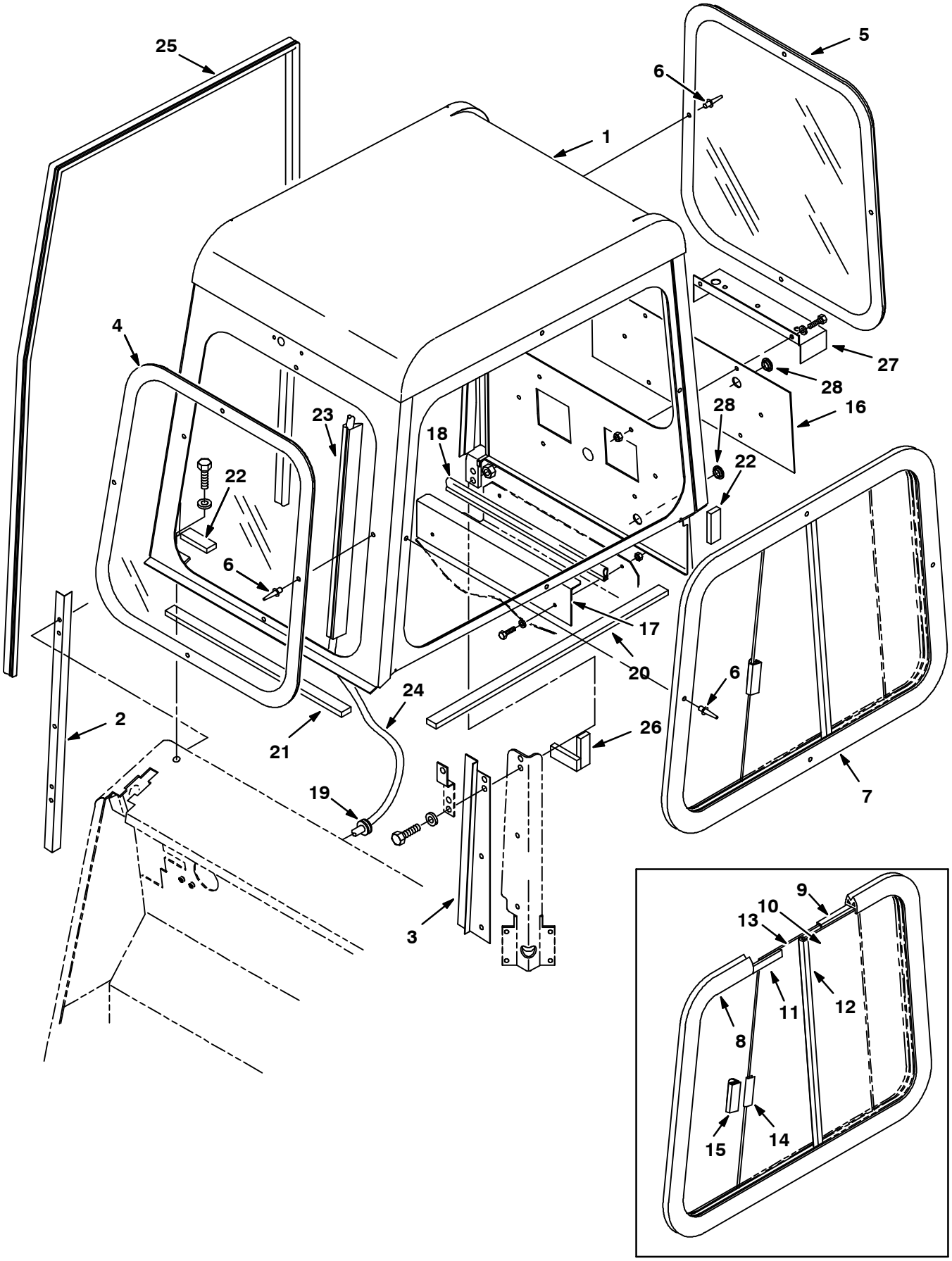

07878/07482

Fig. 14 - Cab Frame and Windows Group

NOTE: Cab Kit, TENNANT Part Number 59511, includes Fig. 13, Fig. 14, Fig. 15, and Fig. 16.

Ref.	Tennant Part No.	Machine Serial Number	Description	Qty.
1	55180	(000000-)	Cab Wldt	1
2	56546	(000000-)	Angle, Door Jamb	1
3	56560	(000000-)	Angle, Door Jamb, Lower, Rear	1
4	74430	(000000-)	Window, Cab, Front	1
5	74431	(000000-)	Window, Cab, Rear	1
6	56799	(xxxxxx-)	Rivet, Pop- .125Dx.38x.25Dhd Al	12
7	74429	(xxxxxx-)	Window, Cab, Side	1
8	55393	(000000-xxxxxx)	Weather Strip, L.H.	1
9	55395	(000000-xxxxxx)	Channel,Flexible,L.H	1
10	58831	(000000-xxxxxx)	Pane, Glass, Left ,Stationry (Repl. By 74429)	1
11	51608	(000000-xxxxxx)	Strip,Rbr.25X.50S&M	1
12	51677	(000000-xxxxxx)	Channel, Rigid	1
13	58832	(000000-xxxxxx)	Pane, Glass, Left, Sliding (Repl. By 74429)	1
14	58974	(000000-xxxxxx)	Pad, Neoprene .06 X .7 X 2.7	1
15	15066	(000000-xxxxxx)	Finger Pull	1
16	55270	(000000-)	Plate, Cover	1
17	55227	(000000-)	Plate, Seal, Sppt, Seat	1
18	55228	(000000-)	Seal, 19.75 Lg	1
19	56187	(000000-)	Grommet, Rubber	1
20	55963	(000000-)	Seal, Cab, Side	1
21	55959	(000000-)	Seal, Cab, Front	1
22	55968	(000000-)	Seal, Cab, Side	2
23	55973	(000000-)	Duct, Vinyl 24.0	1
24	60287	(000000-)	Harness, Cab	1
25	66221	(000000-)	Seal, 142.0 Lg Door	1
26	66197	(000000-)	Insulation, Acoustic	1
27	71058	(000000-)	Bracket, Back-Up Alarm	1
28	55035	(000000-)	Plug, Plastic, 1.00 D	2

Fig. 15 - Cab Door Group

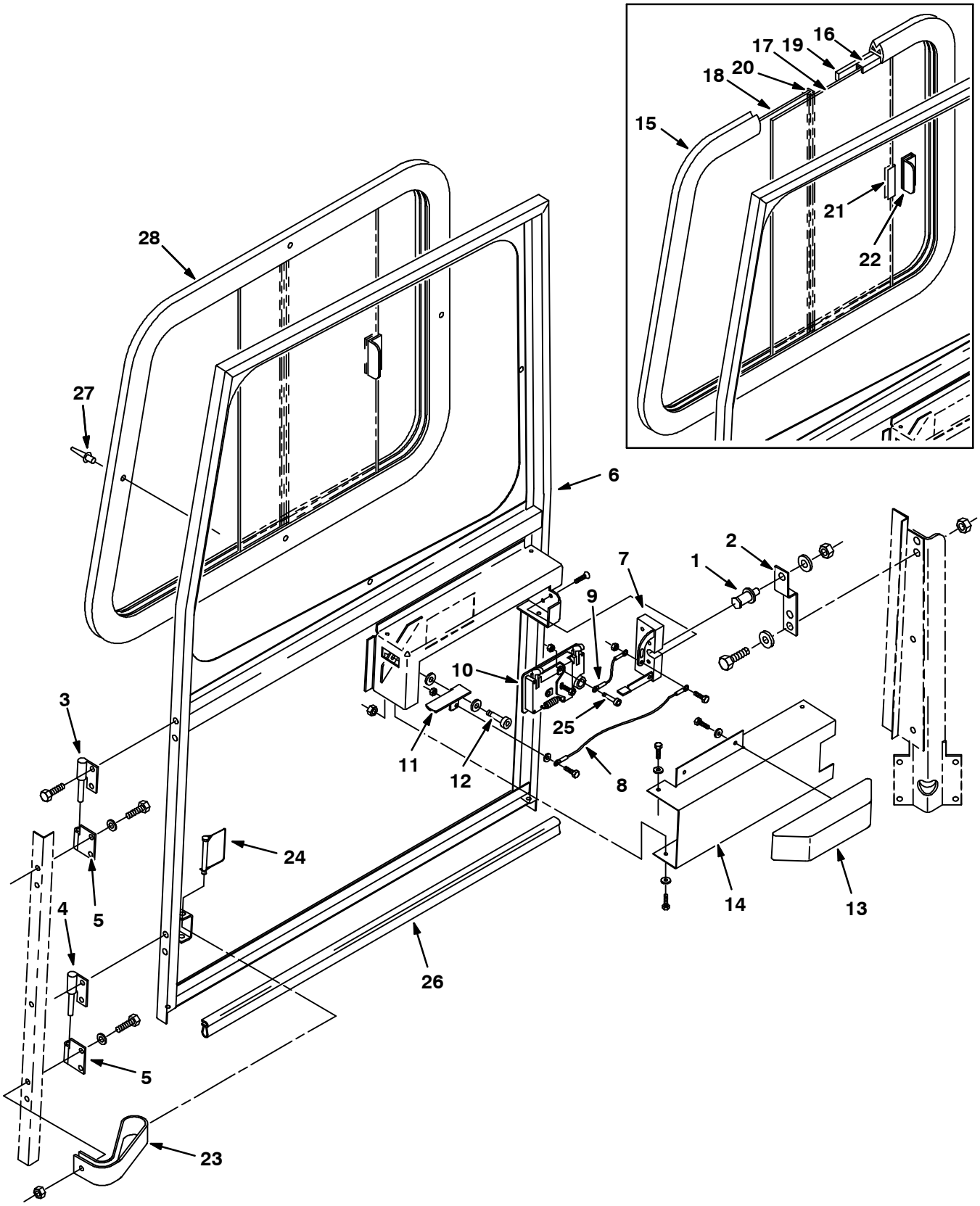

07879/07483

Fig. 15 - Cab Door Group

NOTE: Cab Kit, TENNANT Part Number 59511, includes Fig. 13, Fig. 14, Fig. 15, and Fig. 16.

Ref.	Tennant Part No.	Machine Serial Number	Description	Qty.
1	58898	(000000-)	Bolt, Latch	1
2	59032	(000000-)	Bracket, Latch, Bolt	1
3	59297	(000000-)	Hinge Wldt, Long Pin	1
4	59211	(000000-)	Hinge Wldt, Short Pin	1
5	59250	(000000-)	Hinge Wldt, Cab Door	2
6	59033	(000000-)	Door Wldt, Cab	1
7	59514	(000000-)	Latch	1
8	57702	(000000-)	Cable, Door, Access	1
9	55038	(000000-)	Cable, .06D X 5.75	1
10	59515	(000000-)	Handle, Paddle	1
11	59028	(000000-)	Lever, Door Release	1
12	02129	(000000-)	Scr-Shld .375Dx0.38L .31-18	1
13	34280	(000000-)	Armrest Cab	1
14	59031	(000000-)	Cover, Bracket, Armrest	1
15	23866	(000000-xxxxxx)	Weatherstrip,Rubber	1
16	23865	(000000-xxxxxx)	Channel,Glassrun,Flx#B127, 110	1
17	58830	(000000-xxxxxx)	Pane, Acrylc, Door,Sliding (Repl. By 74428)	1
18	58823	(000000-xxxxxx)	Pane, Acrylc, Door,Stationry (Repl. By 74428)	1
19	23863	(000000-xxxxxx)	Strip,Rbr.25X.50S&M #6422,55.0	1
20	51677	(000000-xxxxxx)	Channel, Rigid	1
21	58974	(000000-xxxxxx)	Pad, Neoprene .06 X .7 X 2.7	1
22	15066	(000000-xxxxxx)	Finger Pull	1
23	60862	(000000-)	Sleeve, Door Stop	1
24	02662	(000000-)	Pin Assy, Keeper	1
25	31249	(000000-)	Scr-Shld .250Dx1.25L 10-24	1
26	72024	(000000-)	Seal, Cab Door	1
27	56799	(xxxxxx-)	Rivet, Pop- .125Dx.38x.25Dhd Al	4
28	74428	(xxxxxx-)	Window, Cab, Door	1

Fig. 16 - Cab Electrical and Wiper Group

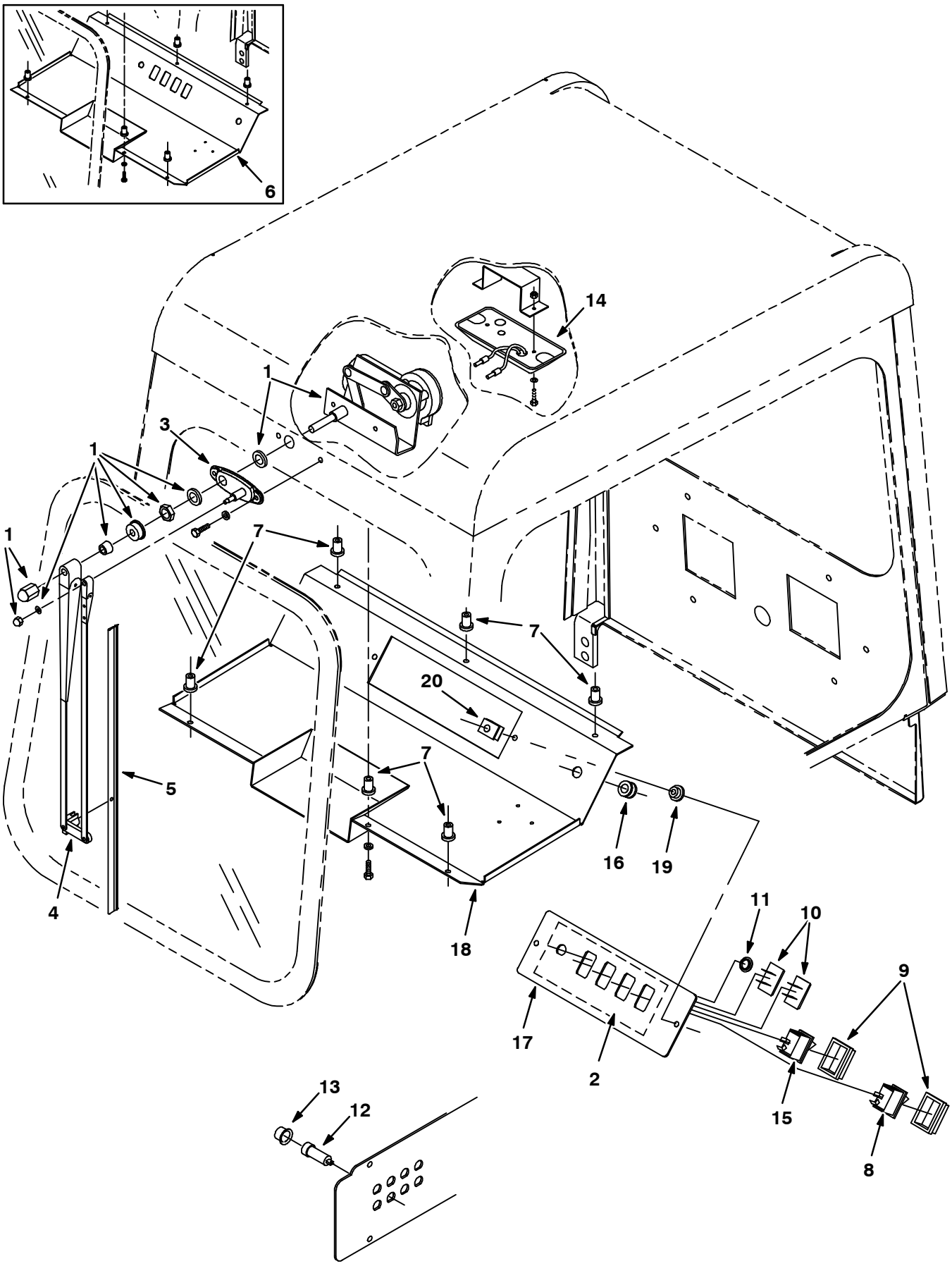

07881/07485

Fig. 16 - Cab Electrical and Wiper Group

NOTE: Cab Kit, TENNANT Part Number 59511, includes Fig. 13, Fig. 14, Fig. 15, and Fig. 16.

	Ref.	Tennant Part No.	Machine Serial Number	Description	Qty.
	1	59803	(000000-)	Motor-Ele 12V, Wiper, Windshld	1
	2	55181	(000000-)	Label, Operational, Cab	1
	3	59797	(000000-)	Plate, Mtg, Wiper Kit	1
	4	59799	(000000-)	Arm, Windshield Wiper, Panto	1
	5	74433	(000000-)	Blade, Windshield Wiper, 18”	1
	6	72099	(000000-001196)	Cover Wldt Replacement Kit	1
	7	41845	(000000-)	Well-Nut .25-20 #1/4-5	6
	8	65553	(000000-)	Switch, Rocker Dpdt	1
	9	57807	(000000-)	Cover, Rocker Switch Seal	2
	10	57772	(000000-)	Plate-Cover	2
	11	57167	(000000-)	Plugbtn .62H .03-.12 Blacknyl	1
	12	57803	(000000-)	Breaker-Circuit, 15 Resetbl	1
	13	57751	(000000-)	Boot-Circuit Breaker	1
∇	14	55461	(000000-)	Light Assy, Dome	1
▲		72142	(000000-)	Bulb	1
	15	65561	(000000-)	Switch, Rocker Spst	1
	16	10632-12	(000000-)	Grommet,Rbr, 0.38 In	1
	17	71057	(001197-)	Panel, Switch, Cab	1
	18	72049	(001197-)	Cover Wldt	1
	19	01047	(001197-)	Retainer	2
	20	12271	(001197-)	Nut, U M6 X 1,0	2

Fig. 17 – Cab Pressurizer Kit

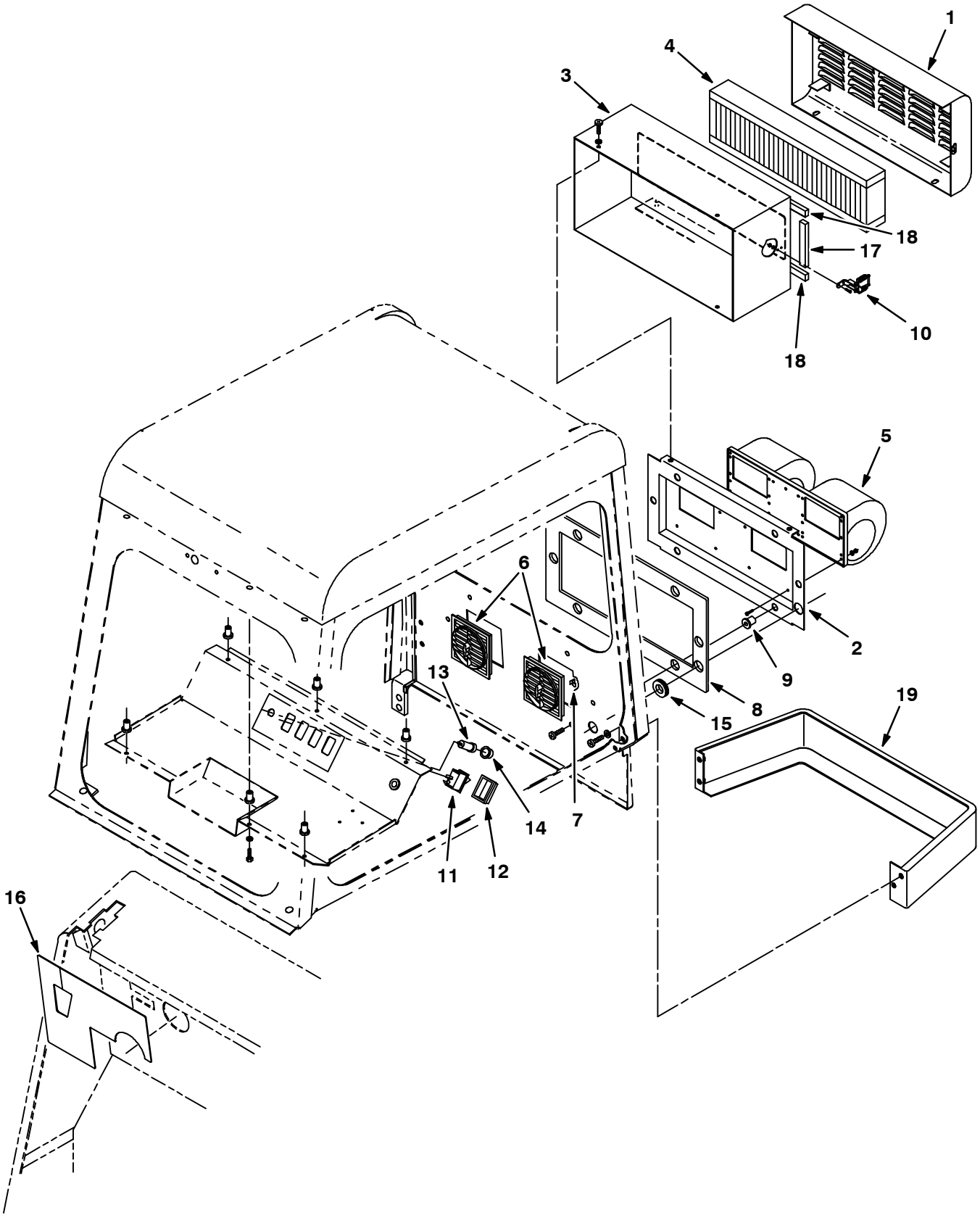

07942/07498

Fig. 17 - Cab Pressurizer Kit

	Ref.	Tennant Part No.	Machine Serial Number	Description	Qty.
∇		59557	(000000-)	Pressurizer Kit Cab 355	1
▲	1	55213	(000000-)	Housing Wldt, Filter	1
▲	2	59437	(000000-)	Panel, Mtg, Pressurizer	1
▲	3	55211	(000000-)	Cover Wldt, Pressurizer	1
▲	4	59657	(000000-)	Filter, Panel 5.25 X 18.5 X 2	1
▲	5	55042	(000000-)	Blower, Assy	1
▲	6	57536	(000000-)	Louver Assy	2
▲	7	57537	(000000-)	Fastener, Clip-Louver	8
▲	8	55182	(000000-)	Seal, Pressurizer	1
▲	9	55037	(000000-)	Well-Nut .31-18	6
▲	10	37083-1	(000000-)	Catch-No-Strike	2
▲	11	65553	(000000-)	Switch, Rocker Dpdt	1
▲	12	57807	(000000-)	Cover, Rocker Switch Seal	1
▲	13	57803	(000000-)	Breaker-Circuit, 15 Resetbl	1
▲	14	57751	(000000-)	Boot-Circuit Breaker	1
▲	15	10632-18	(000000-)	Grommet,Rbr, 0.69 In	1
▲	16	66220	(000000-)	Seal, Side Brush Lift	1
▲	17	55404	(000000-)	Seal Foam Rbr .38 .62W 4.4L	2
▲	18	55302	(000000-)	Seal Foam Rbr .38 .62W 18.6L	2
▲	19	55453	(000000-)	Bumper, Pressurizer	1
▲		46236	(000000-)	Clamp, Cable, 0.25Dia 0.56 wth	1

Fig. 17a - Cab Dust Kit

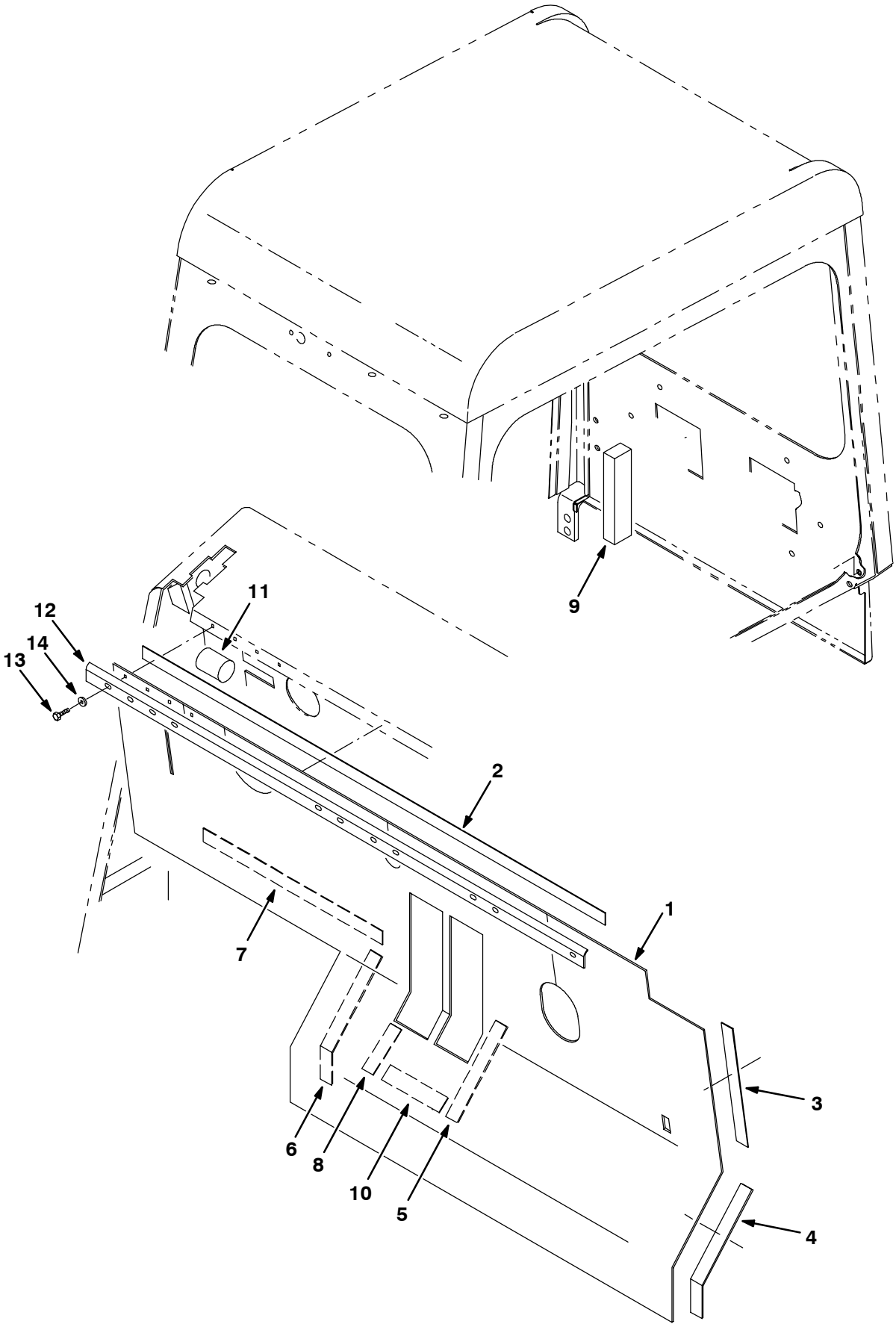

353548 - IC, NA, JP

Fig. 17a - Cab Dust Kit

	Ref.	Tennant Part No.	Machine Serial Number	Description	Qty.
▽		370115	(000000-)	Cab Dust Kit	1
▲	1	370116	(000000-)	Skirt, Firewall, Rh	1
▲	2	370117	(000000-)	Strip, Velcro 45 Inches Long	1
▲	3	370118	(000000-)	Strip, Velcro 9.75 Inches Long	1
▲	4	370119	(000000-)	Strip, Velcro 11 Inches Long	1
▲	5	370120	(000000-)	Strip, Velcro 15 Inches Long	1
▲	6	370121	(000000-)	Strip, Velcro 12 Inches Long	1
▲	7	370122	(000000-)	Strip, Velcro16.5 Inches Long	1
▲	8	370129	(000000-)	Strip, Velcro 3.25 Inches Long	1
▲	9	370124	(000000-)	Seal, Seat Side 1x1.5x6.75	1
▲	10	370130	(000000-)	Strip, Velcro	1
▲	11	370125	(000000-)	Seal, Round 1.5Dx2.0L	2
▲	12	370159	(000000-)	Strip, Steel	1
▲	13	12459	(000000-)	Scr-Hxfmgm 6x1.0	11
▲	14	01684	(000000-)	Washer Flt .25 Ss	11

Fig. 18 - Cab Heater Kit

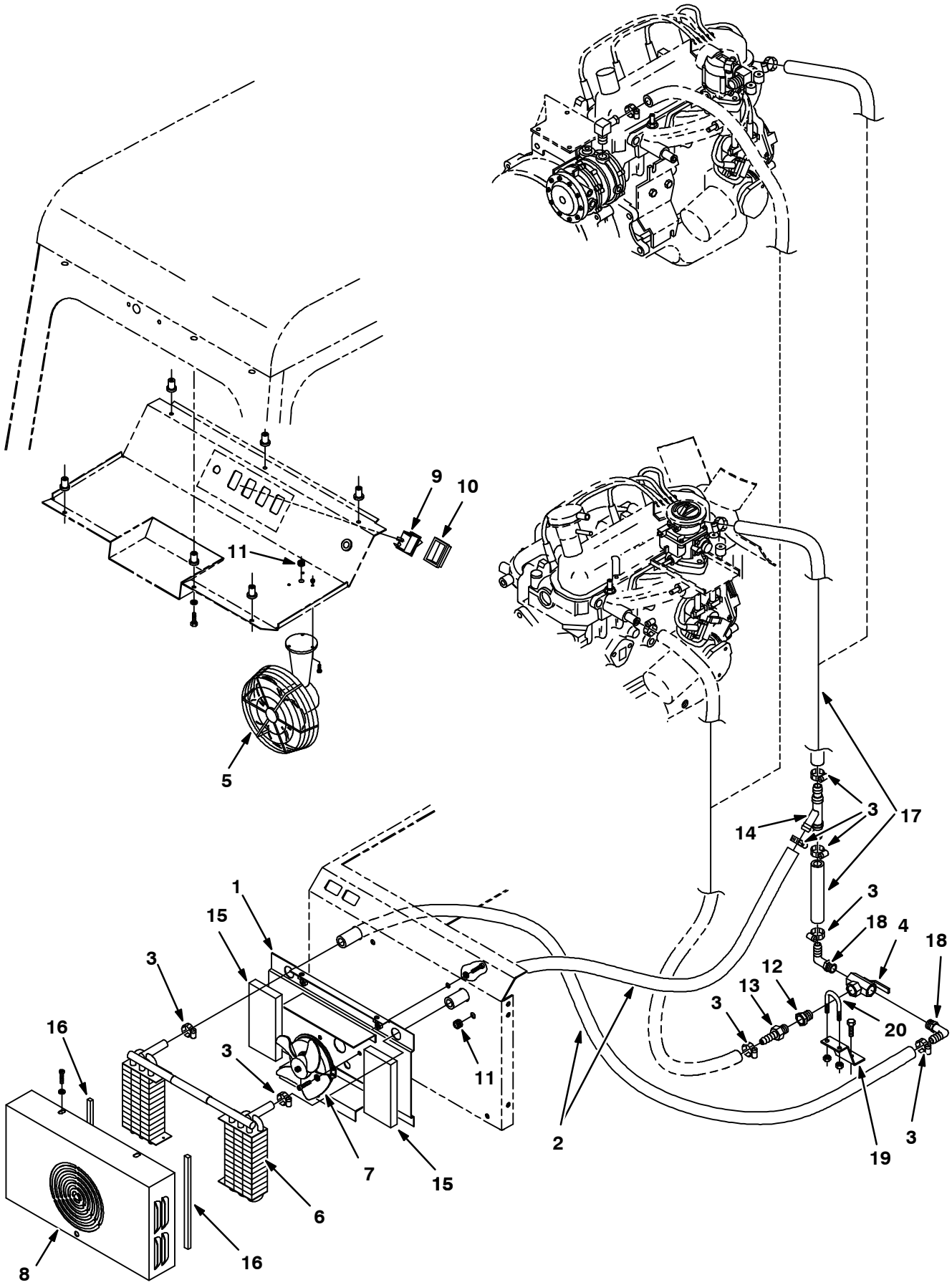

07940/07496

Fig. 18 - Cab Heater Kit

	Ref.	Tennant Part No.	Machine Serial Number	Description	Qty.
∇		59512	(000000-)	Heater Kit 355L	1
▲	1	55220	(000000-)	Channel Wldt, Heater	1
▲	2	57912	(000000-)	Hose,.62 Idx60.00 Lng, Heater	2
▲	3	63810	(000000-)	Clamp-Wormdrive, 0.56- 1.06D	8
▲	4	31507	(000000-)	Valve-3 Way	1
▲	5	55459	(000000-)	Fan Assy, Defroster	1
▲	6	55215	(000000-)	Core, Heater	1
▲	7	374515	(000000-003837)	Replm Kit, Fan Motor F/55216	1
▲	7	374514	(003838-)	Motor Assy, Heater W/Fan	1
▲	8	55221	(000000-)	Cover, Heater	1
▲	9	65561	(000000-)	Switch, Rocker Spst	1
▲	10	57807	(000000-)	Cover, Rocker Switch Seal	1
▲	11	10632-12	(000000-)	Grommet,Rbr, 0.38 In	2
▲	12	47167	(000000-)	Ftg-Str Npt/Npt 06Pf-08Pm	1
▲	13	27767	(000000-)	Ftg-Brs Str Em10/Pm06	2
▲	14	57872	(000000-)	Ftg."Y".62 Id Hose - Heater	1
▲	15	55226	(000000-)	Seal, Heater Air	2
▲	16	55976	(000000-)	Seal, Foam Rbr .31X.38X	2
▲	17	31543	(000000-)	Hose, Heater (Cut in 2)	1
▲	18	30268	(000000-)	Ftg-Brs E90 EM10/Pm08	2
▲	19	35296	(000000-)	Bracket, Valve	1
▲	20	45142	(000000-)	Bolt-U, 1.13 Id	1

Fig. 19 - Blower Kit

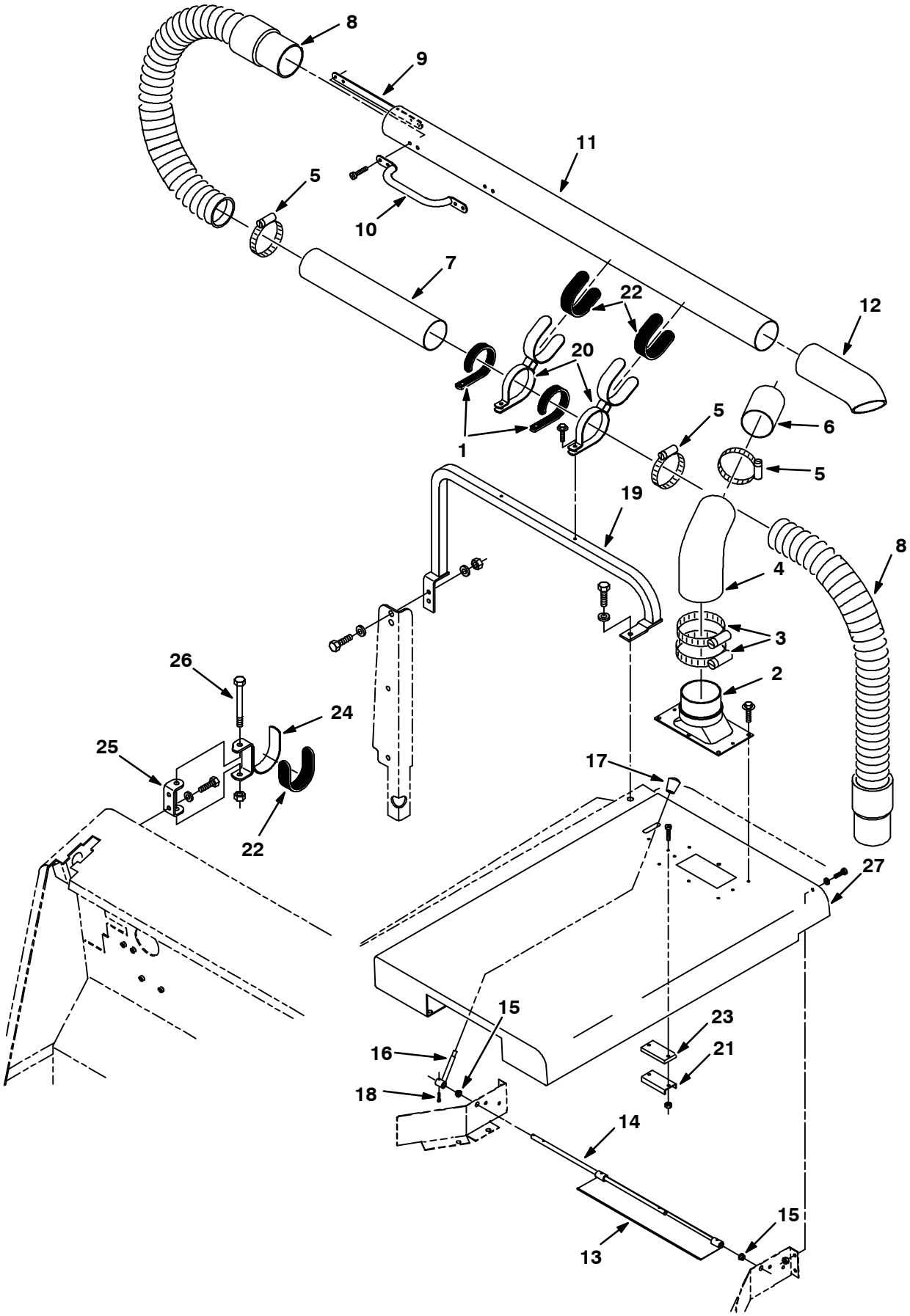

07939/07495

Fig. 19 - Blower Kit

	Ref.	Tennant Part No.	Machine Serial Number	Description	Qty.
∇		56621	(000000-)	Blower Kit 355L	1
▲	1	71025	(000000-)	Pad, Rubber	2
▲	2	72143	(000000-)	Duct, Outlet, Blower Wand	1
▲	3	23498	(000000-)	Clamp-Wormdrive, 3.56- 4.50D	2
▲	4	59919	(000000-)	Hose, Reducer	1
▲	5	43555	(000000-)	Clamp-Wormdrive, 1.62- 3.50D	3
▲	6	53894	(000000-)	Tube, Plastic, 3.0 Od X 4.0Lg	1
▲	7	53883	(000000-)	Tube, Plastic, 3.0 Od X 16.0Lg	1
▲	8	64320	(000000-)	Hose& Cuff Assy,Vinyl3.0Idx 24	2
▲	9	69937	(000000-)	Plate, Backing, Handle	1
▲	10	32822	(000000-)	Handle, Grab	1
▲	11	53895	(000000-)	Tube, Plastic, 3.0 Od X 48.0Lg	1
▲	12	59104	(000000-)	Hose, Rbr	1
▲	13	59012	(000000-)	Plate Wldt, Blower Wand	1
▲	14	59013	(000000-)	Shaft, Baffle	1
▲	15	63469-3	(000000-)	Brg, Snap In - Nyliner .38 Id	2
▲	16	58881	(000000-)	Lever Wldt, Baffle, Blowr Wand	1
▲	17	69955	(000000-)	Knob, Black, M8	1
▲	18	23999-6	(000000-)	Pin,Roll,.09Odx0.75L,.094/.097	1
▲	19	69923	(000000-)	Tube Wldt, Sppt, Blower Wand	1
▲	20	55489	(000000-)	Clamp Wldt, Tube, Blower Wand	2
▲	21	63378	(000000-)	Magnet, Drive Brush	1
▲	22	69981	(000000-)	Pad, Rubber	3
▲	23	69953	(000000-)	Plate, Spacer, Magnet	1
▲	24	74438	(000000-)	Bracket Wldt, Support, Blower	1
▲	25	74439	(000000-)	Bracket, Mtg, Tube	1
▲	26	34877	(000000-)	Scr Hex M10X1.5 100	1
▲		59768	(000000-)	Label Set, Operational 355L	1
	27	69935	(000000-)	Cover Weldt, Engine, Blower Wand	1

Fig. 20 – Blower Kit, Overhead Guard

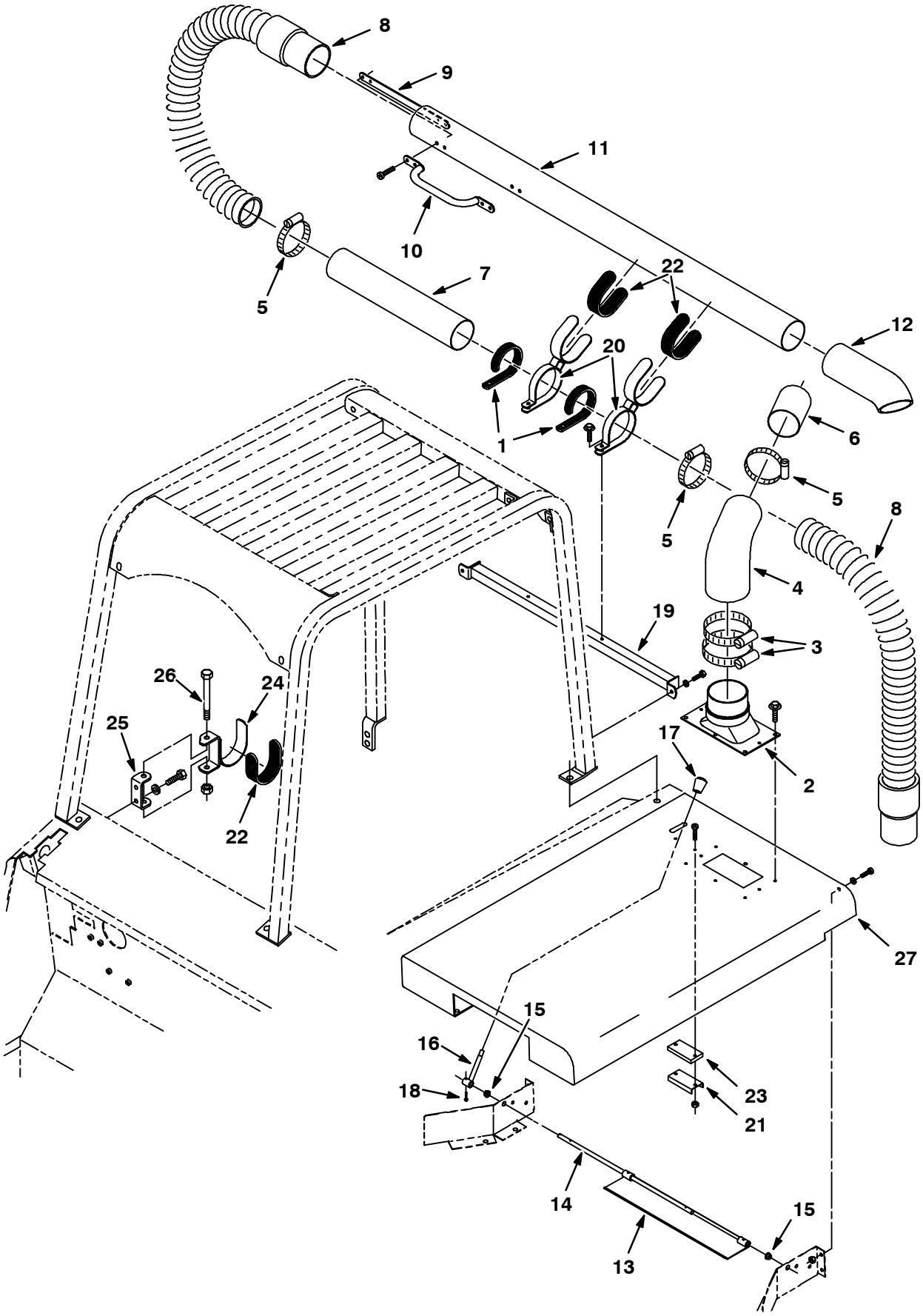

07938/07521

Fig. 20 - Blower Kit, Overhead Guard

	Ref.	Tennant Part No.	Machine Serial Number	Description	Qty.
∇		69984	(000000-)	Blower Kit, W/Ohg	1
▲	1	71025	(000000-)	Pad, Rubber	2
▲	2	72143	(000000-)	Duct, Outlet, Blower Wand	1
▲	3	23498	(000000-)	Clamp-Wormdrive, 3.56- 4.50D	2
▲	4	59919	(000000-)	Hose, Reducer	1
▲	5	43555	(000000-)	Clamp-Wormdrive, 1.62- 3.50D	3
▲	6	53894	(000000-)	Tube, Plastic, 3.0 Od X 4.0Lg	1
▲	7	53883	(000000-)	Tube, Plastic, 3.0 Od X 16.0Lg	1
▲	8	64320	(000000-)	Hose& Cuff Assy,Vinyl3.0Idx 24	2
▲	9	69937	(000000-)	Plate, Backing, Handle	1
▲	10	32822	(000000-)	Handle, Grab	1
▲	11	53895	(000000-)	Tube, Plastic, 3.0 Od X 48.0Lg	1
▲	12	59104	(000000-)	Hose, Rbr	1
▲	13	59012	(000000-)	Plate Wldt, Blower Wand	1
▲	14	59013	(000000-)	Shaft, Baffle	1
▲	15	63469-3	(000000-)	Brg, Snap In - Nyliner .38 Id	2
▲	16	58881	(000000-)	Lever Wldt, Baffle, Blowr Wand	1
▲	17	69955	(000000-)	Knob, Black, M8	1
▲	18	23999-6	(000000-)	Pin,Roll,.09Odx0.75L,.094/.097	1
▲	19	69958	(000000-)	Tube Wldt, Sppt, Blower Wand	1
▲	20	55489	(000000-)	Clamp Wldt, Tube, Blower Wand	2
▲	21	63378	(000000-)	Magnet, Drive Brush	1
▲	22	69981	(000000-)	Pad, Rubber	3
▲	23	69953	(000000-)	Plate, Spacer, Magnet	1
▲	24	74438	(000000-)	Bracket Wldt, Support, Blower	1
▲	25	74439	(000000-)	Bracket, Mtg, Tube	1
▲	26	34877	(000000-)	Scr Hex M10X1.5 100	1
▲		59768	(000000-)	Label Set, Operational 355L	1
	27	69935	(000000-)	Cover Weldt, Engine, Blower Wand	1

Fig. 21 - Vacuum Wand Kit

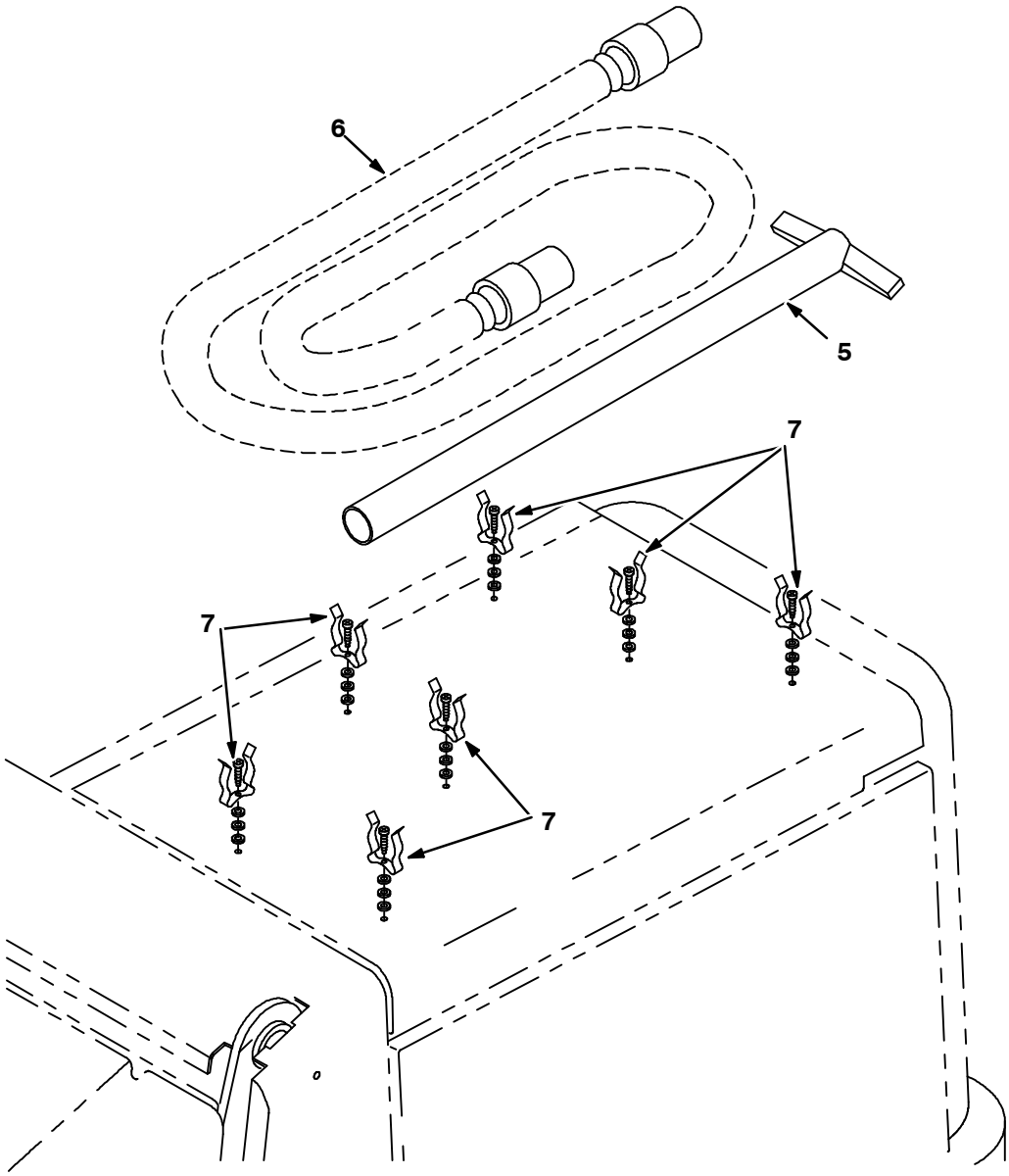

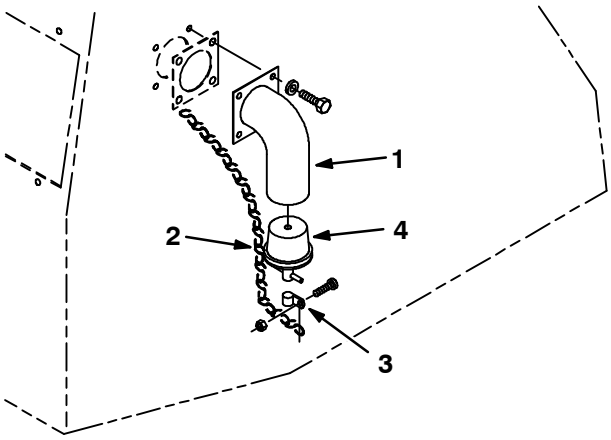

07876/07480

Fig. 21 - Vacuum Wand Kit

	Ref.	Tennant Part No.	Machine Serial Number	Description	Qty.
∇		59540	(000000-)	Wand Kit, Vac	1
▲	1	55964	(000000-)	Adaptor Wldt, Vac Wand	1
▲	2	44166	(000000-)	Chain,Jack#12, 6Links,Znc	1
▲	3	26395-2	(000000-)	Clamp-Cable, 0.38Dia 0.38Wth	1
▲	4	42124	(000000-)	Plug, Drain	1
▲	5	54012	(000000-)	Wand Weldment	1
▲	6	54009	(000000-)	Hose&2Cuff Assy,Vinyl2.0Id10Ft	1
▲	7	67004	(000000-)	Clip-Finger Grip	7

Fig. 22 - Side Brush Dust Control Kit

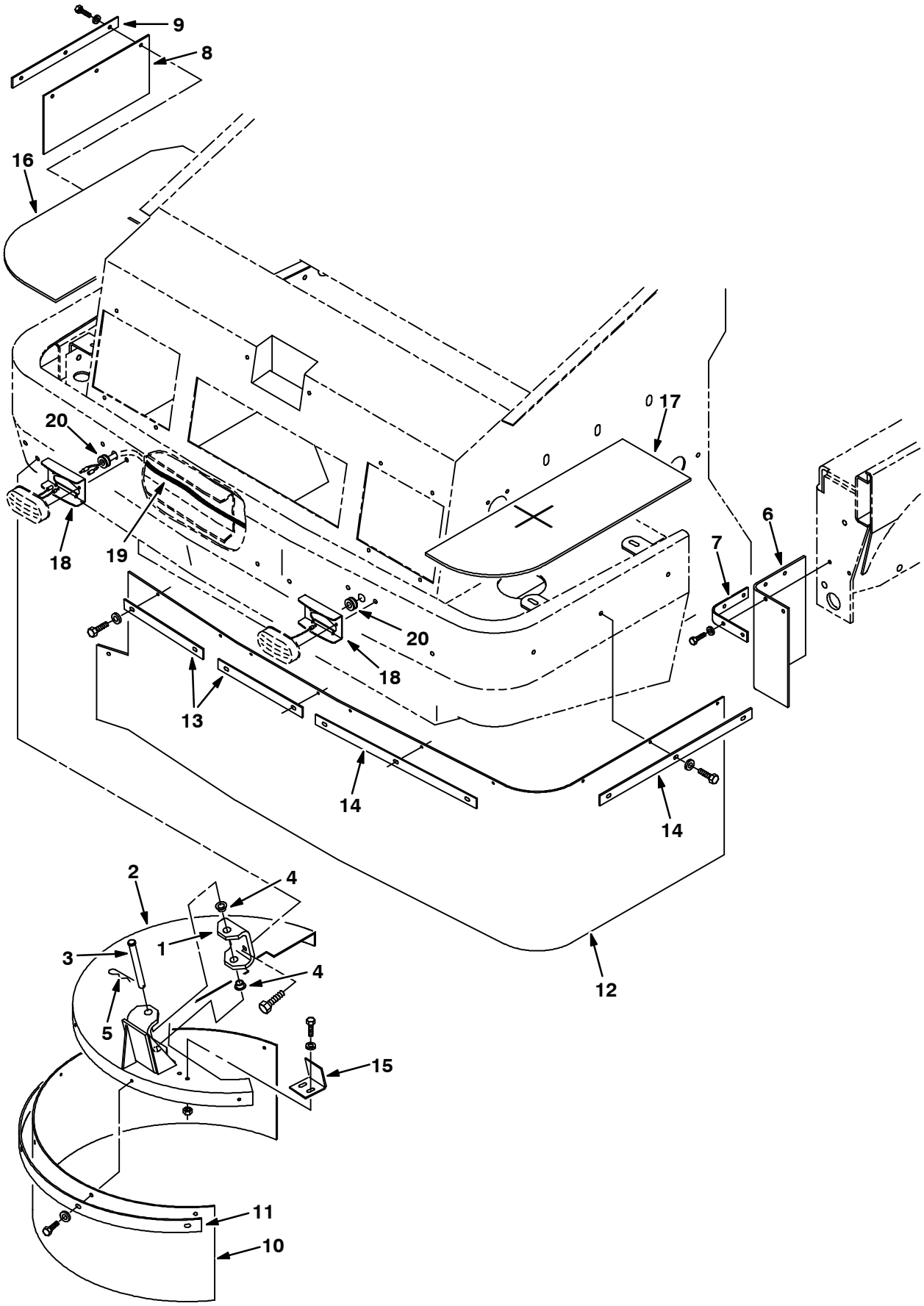

07935/07519

Fig. 22 - Side Brush Dust Control Kit

	Ref.	Tennant Part No.	Machine Serial Number	Description	Qty.
∇		59508	(000000-001586)	Dust Control Kit Side Brsh 355	1
▲	1	66168	(000000-001586)	Bracket, Sbdc	1
▲	2	66175	(000000-001586)	Cover Wldt, Sbdc	1
▲	3	51538	(000000-001586)	Pin,Clevis,0.50 Dia.X 5.00 Lg	1
▲	4	23274	(000000-001586)	Bshg,Flange	2
▲	5	44906	(000000-001586)	Pin, Hair Cotter	1
▲	6	66176	(000000-001586)	Skirt, Wheel Pocket, Sbdc	2
▲	7	66177	(000000-001586)	Plate, Retainer, Wheel Pocket	2
▲	8	53576	(000000-001586)	Skirt, Sbdc, Rh	1
▲	9	53610	(000000-001586)	Plate, Retainer, Sbdc, Rh	1
▲	10	66178	(000000-001586)	Skirt, Cover, Sbdc	1
▲	11	66179	(000000-001586)	Plate, Retainer, Cover, Sbdc	1
▲	12	66180	(000000-001586)	Skirt, Front, Sbdc	1
▲	13	66181	(000000-001586)	Plate, Retainer, Front, Sbdc	2
▲	14	66182	(000000-001586)	Plate, Retainer, Front,Lh,Sbdc	2
▲	15	66183	(000000-001586)	Angle, Stop	1
▲	16	72086	(000000-001586)	Foam, SBDC, R.H.	1
▲	17	72087	(000000-001586)	Foam, SBDC, L.H.	1
▲	18	72178	(000000-001586)	Guard, Light	2
▲	19	72181	(000000-001586)	Harness, Jumper	1
▲	20	10632-11	(000000-001586)	Grommet, Rbr, 0.38Id, For .19Matl	2

Fig. 23 – Side Brush Dust Control Kit

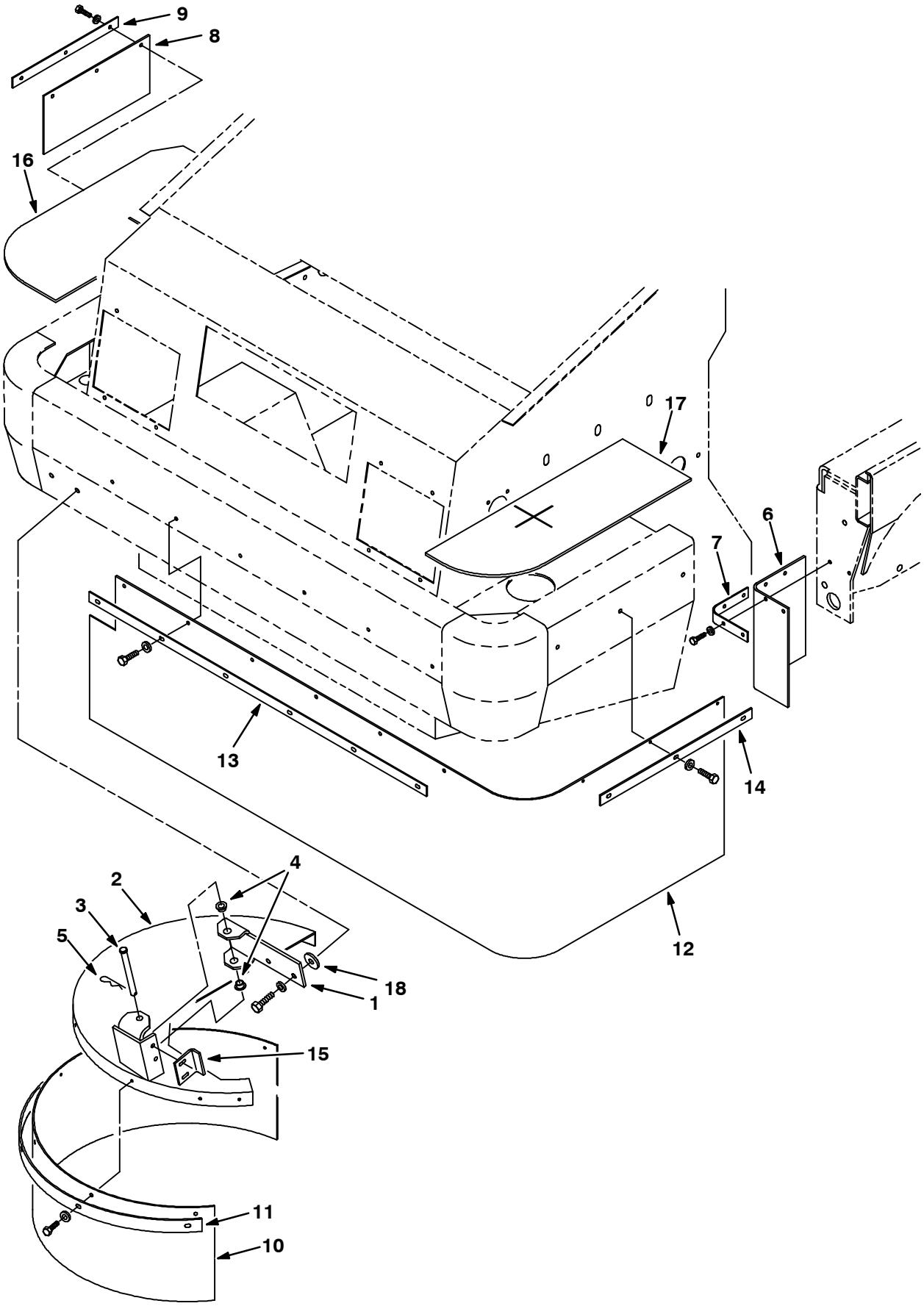

08903/08904

Fig. 23 - Side Brush Dust Control Kit

	Ref.	Tennant Part No.	Machine Serial Number	Description	Qty.
∇		74374	(001587-)	Dust Control Kit Side Brsh 355	1
▲	1	74383	(001587-)	Bracket, Sbdc	1
▲	2	74375	(001587-)	Cover Wldt, Sbdc	1
▲	3	51538	(001587-)	Pin,Clevis,0.50 Dia.X 5.00 Lg	1
▲	4	23274	(001587-)	Bshg,Flange	2
▲	5	44906	(001587-)	Pin, Hair Cotter	1
▲	6	66176	(001587-)	Skirt, Wheel Pocket, Sbdc	2
▲	7	66177	(001587-)	Plate, Retainer, Wheel Pocket	2
▲	8	53576	(001587-)	Skirt, Sbdc, Rh	1
▲	9	53610	(001587-)	Plate, Retainer, Sbdc, Rh	1
▲	10	66178	(001587-)	Skirt, Cover, Sbdc	1
▲	11	66179	(001587-)	Plate, Retainer, Cover, Sbdc	1
▲	12	74379	(001587-)	Skirt, Front, Sbdc	1
▲	13	74380	(001587-)	Plate, Retainer, Front, Sbdc	1
▲	14	74381	(001587-)	Plate, Retainer, Front,Lh,Sbdc	1
▲	15	74382	(001587-)	Angle, Stop	1
▲	16	72086	(001587-)	Foam, SBDC, R.H.	1
▲	17	72087	(001587-)	Foam, SBDC, L.H.	1
▲	18	35843	(001587-)	Washer, .530B 1.50D .19HR	2

Fig. 24 - Seat Belt Kit

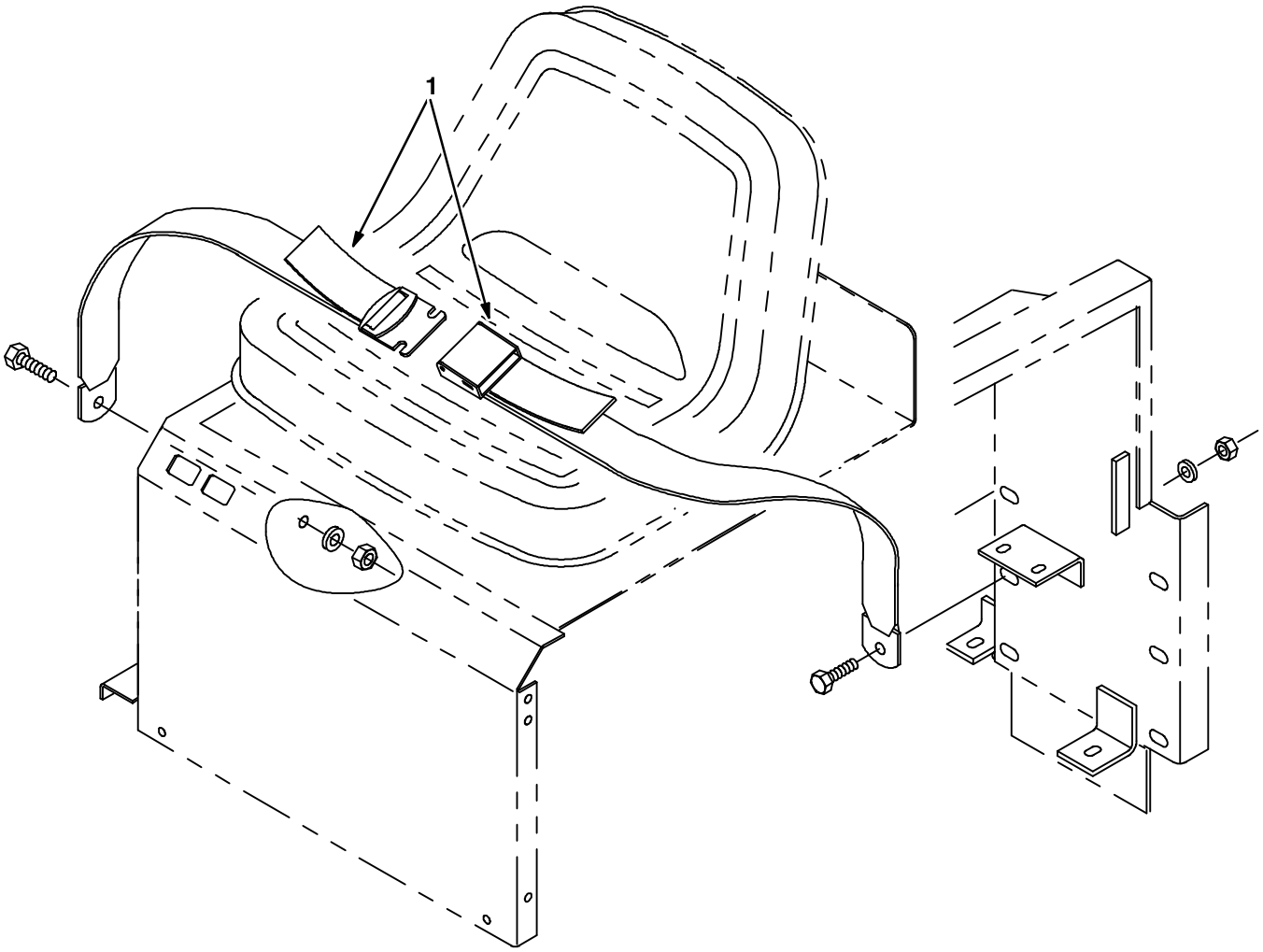

07877/07481

	Ref.	Tennant Part No.	Machine Serial Number	Description	Qty.
∇		59384	(000000-)	Seat Belt Kit 355L	1
▲	1	30533	(000000-)	Belt, Seat	1

Fig. 25 - Protectoseal Fuel Tank Cap Group

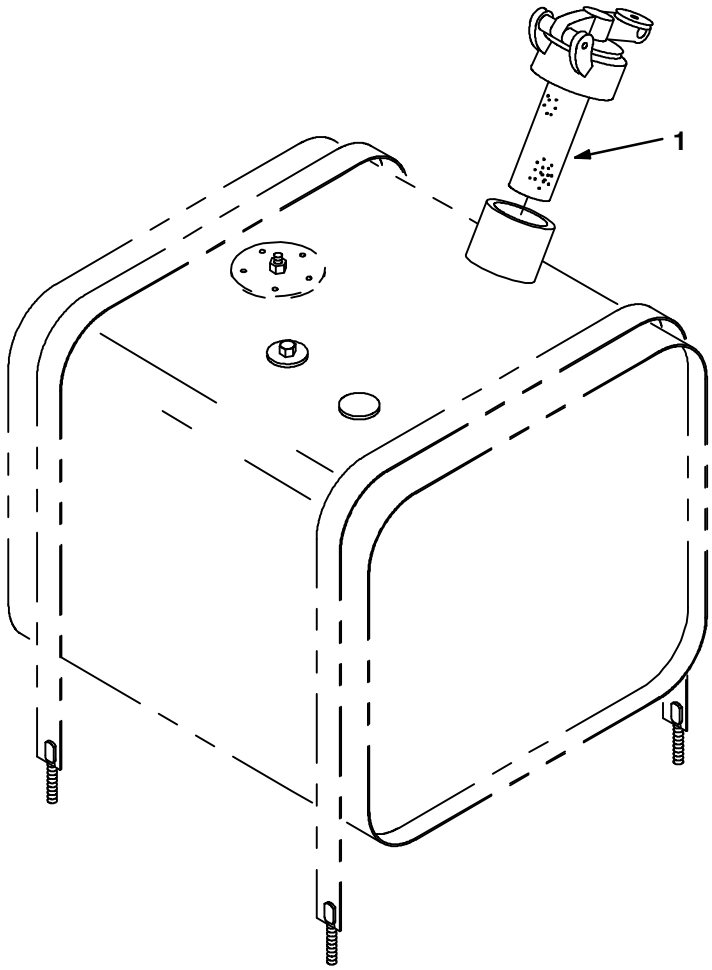

07867/07471

Ref.	Tennant Part No.	Machine Serial Number	Description	Qty.
1	02506-6	(000000-)	Gas Cap, Protectoseal	1

Fig. 26 - Spark Arrest Muffler Group

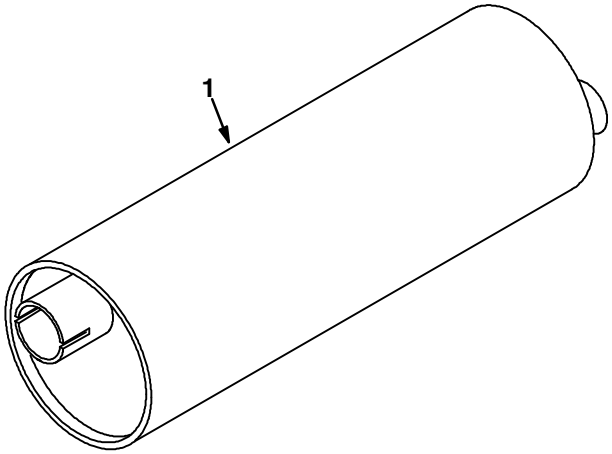

07934/07518

Ref.	Tennant Part No.	Machine Serial Number	Description	Qty.
1	53417	(000000-)	Muffler, Spark Arresting	1

Fig. 27 – Air Filter Safety Element Kit

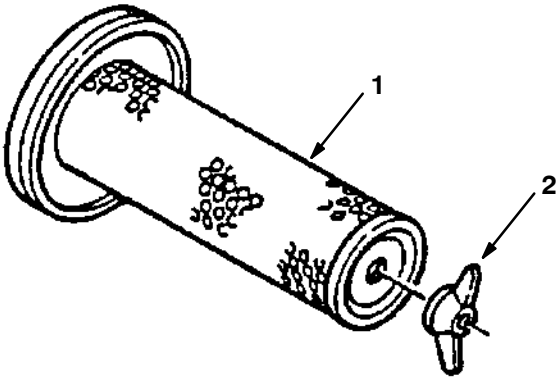

04712

	Ref.	Tennant Part No.	Machine Serial Number	Description	Qty.
▽		07565	(000000–)	Element Kit, Air, Safety	1
▲	1	58121	(000000–)	Element, Safety	1
▲	2	07562	(000000–)	Wingnut	1

Fig. 28 - Fire Extinguisher Kit

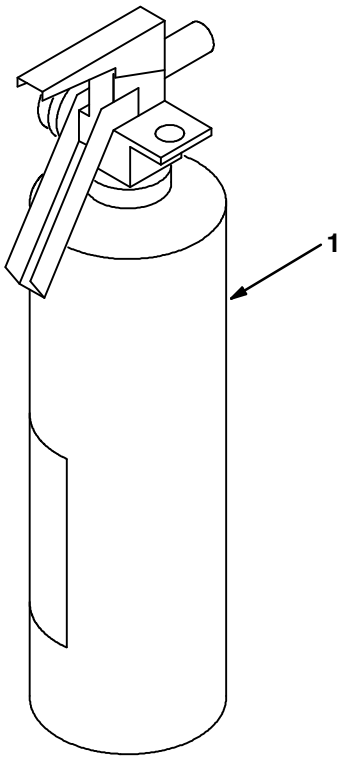

07932/07516

	Ref.	Tennant Part No.	Machine Serial Number	Description	Qty.
∇		59388	(000000-)	Extinguisher Kit Fire 355L	1
▲	1	25312	(000000-)	Extinguisher, Fire	1

Fig. 29 - Battery Group, Dry (International Only)

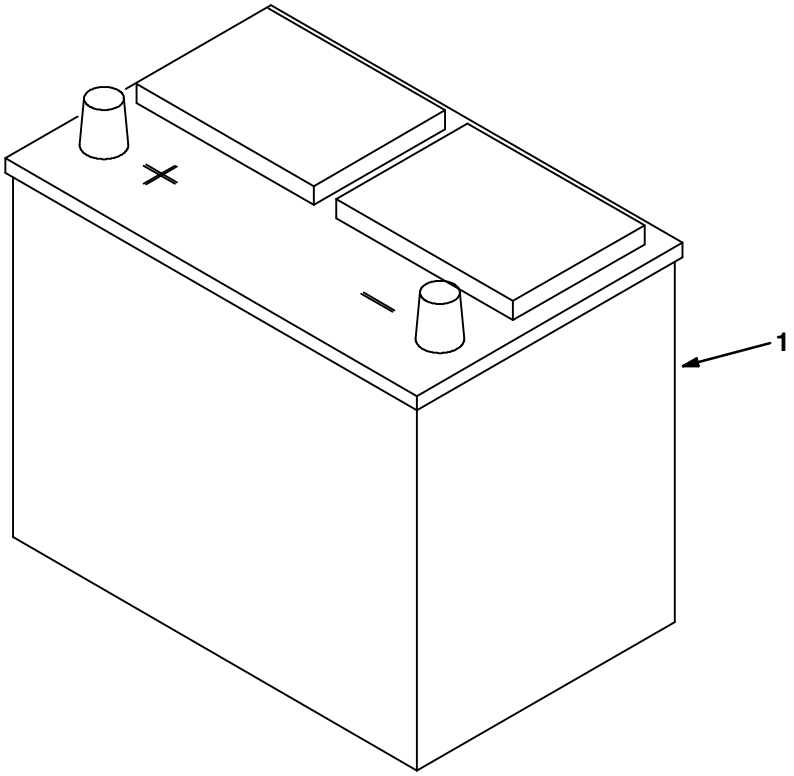

08611/08610

Ref.	Tennant Part No.	Machine Serial Number	Description	Qty.
1	10144	(000000-)	Battery, 12V, Ccamps: 600 Dry	1

Fig. 30 - Soft Ride Non-Marking Tire and Wheel Assembly

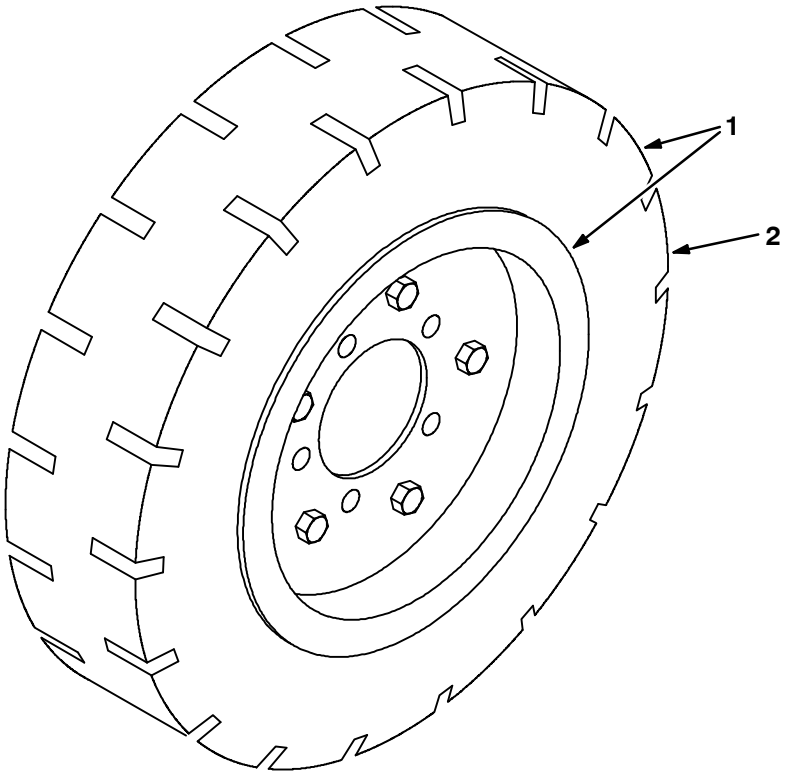

07529/07515

	Ref.	Tennant Part No.	Machine Serial Number	Description	Qty.
▽	1	71022	(000000-)	Tire and Whl. Assy, Soft Ride Solid	1
▲	2	61488	(000000-)	Tire, Solid, Tan, Non-Marking	1

Fig. 31 - Soft Ride Tire and Wheel Assembly

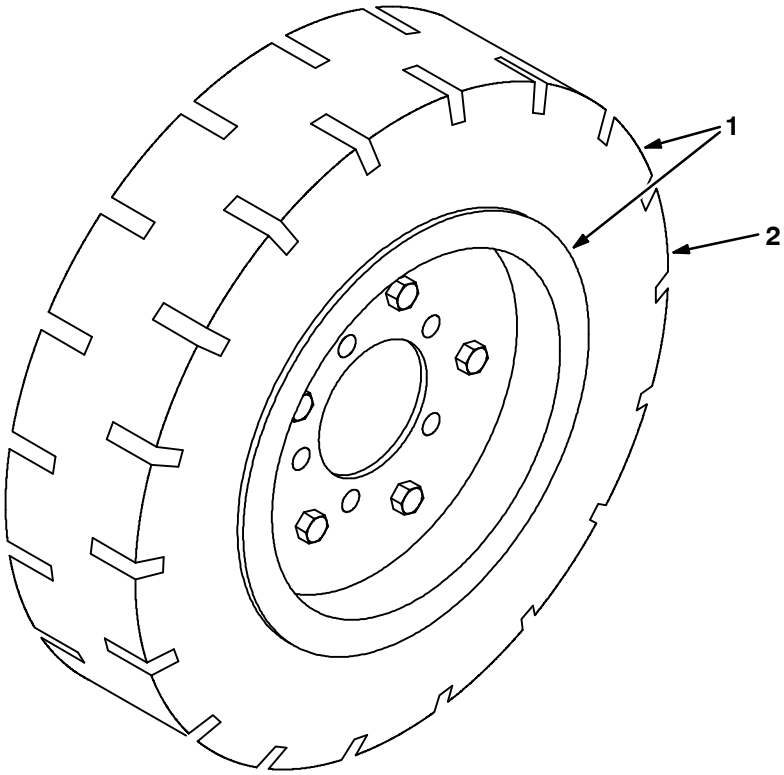

07936/07515

	Ref.	Tennant Part No.	Machine Serial Number	Description	Qty.
▽	1	53817	(000000-)	Tire and Whl. Assy, Soft Ride Solid	1
▲	2	53816	(000000-)	Tire, Solid, Black	1

Fig. 32 - Hi-Wear Tire And Wheel Assembly

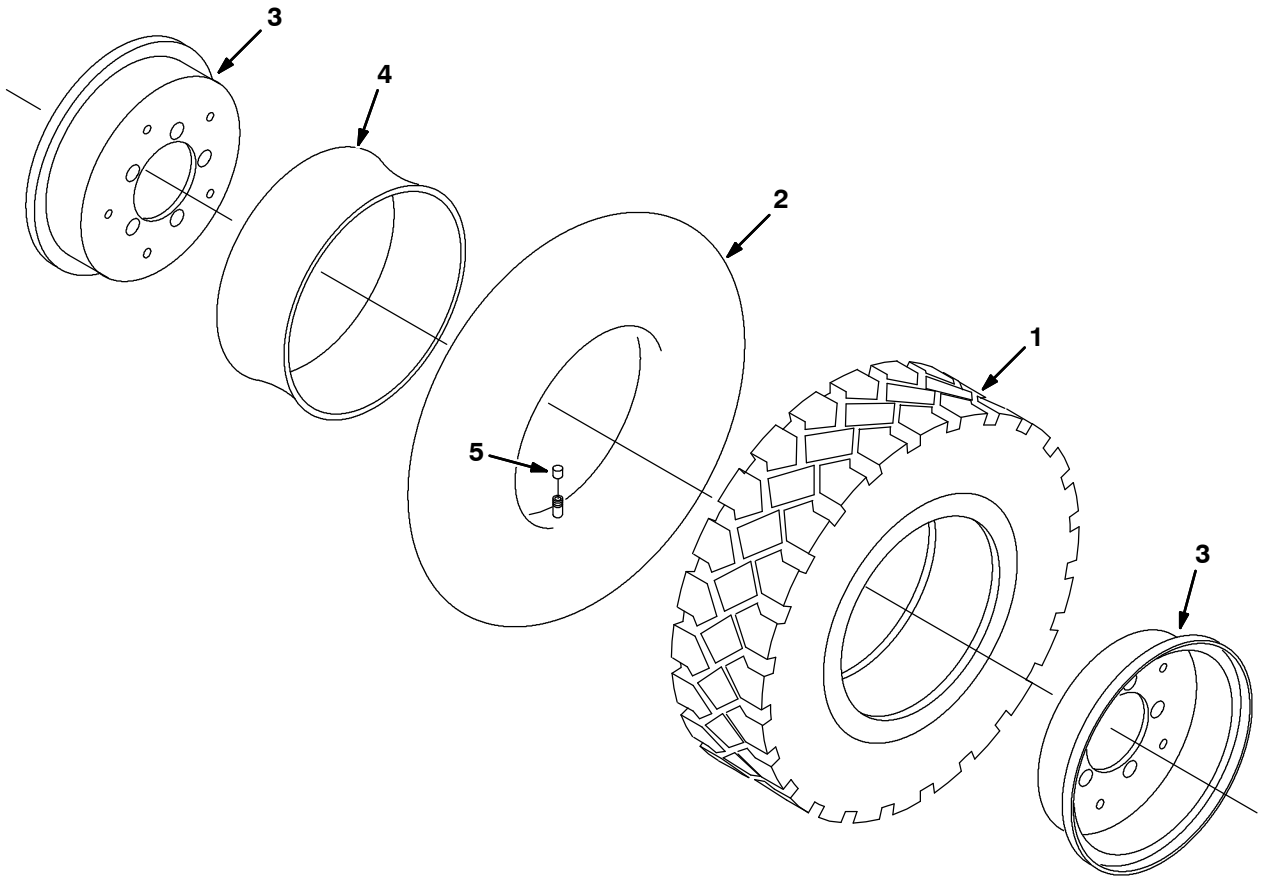

10933/10932

	Ref.	Tennant Part No.	Machine Serial Number	Description	Qty.
∇		70278	(000000-)	Tire&Rim Assy, Hi-Wear 5.00R-8	1
▲	1	70279	(000000-)	Tire, Hi-Wear 5.70/5.00R-8	1
▲	2	70280	(000000-)	Tube, Inner 5.00R-8, Js2 Valve	1
▲	3	70281	(000000-)	Rim Assy, 4.25” Bead x .188 Stl	1
▲	4	53819-2	(000000-)	Flap, Tire-Tube ,570/500-8	1
▲	5	45786	(000000-)	Cap, Valve Stem	1

Fig. 33 - Stainless Steel Hopper Group

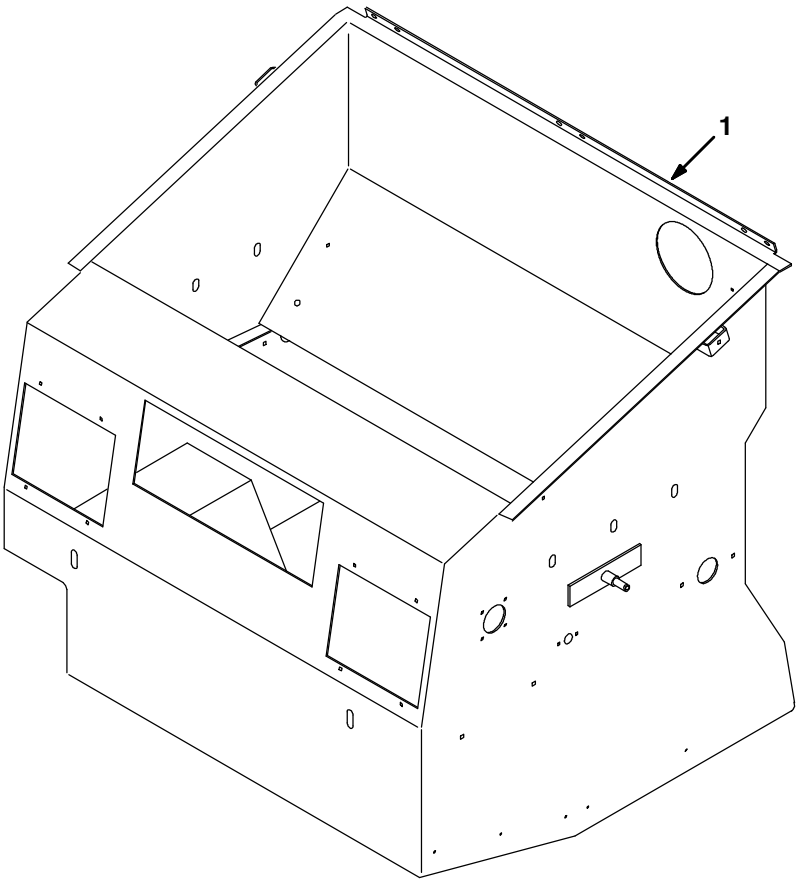

10929/10930

Ref.	Tennant Part No.	Machine Serial Number	Description	Qty.
1	70297	(000000-)	Hopper Wldt, 355/385 Ss	1

Fig. 34 – Demo Group

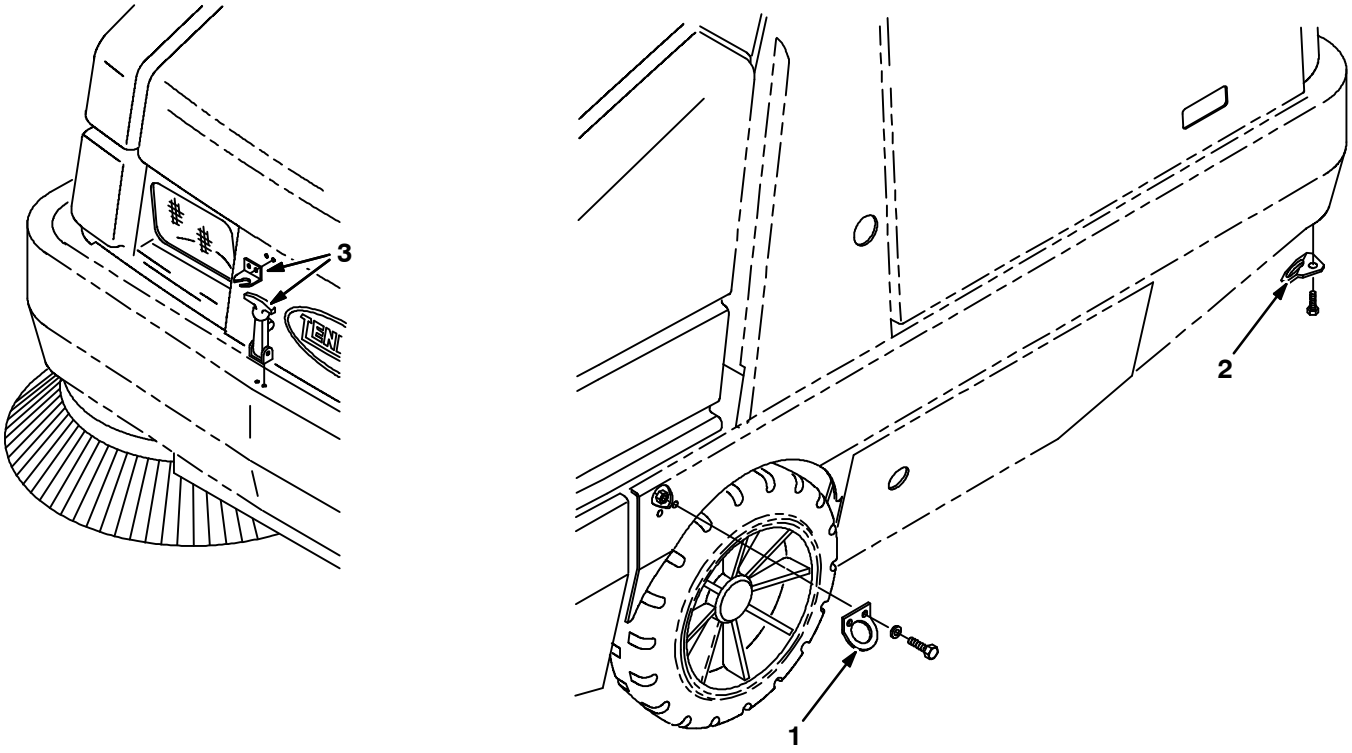

07937/07520

Ref.	Tennant Part No.	Machine Serial Number	Description	Qty.
1	82196	(000000–)	Bracket, Tiedown	2
2	14983	(000000–)	Bracket, Tiedown	2
3	11636	(000000–)	Latch, Draw, Flexible	1

Fig. 35 - Vacuumized Skirt Kit, Main Brush

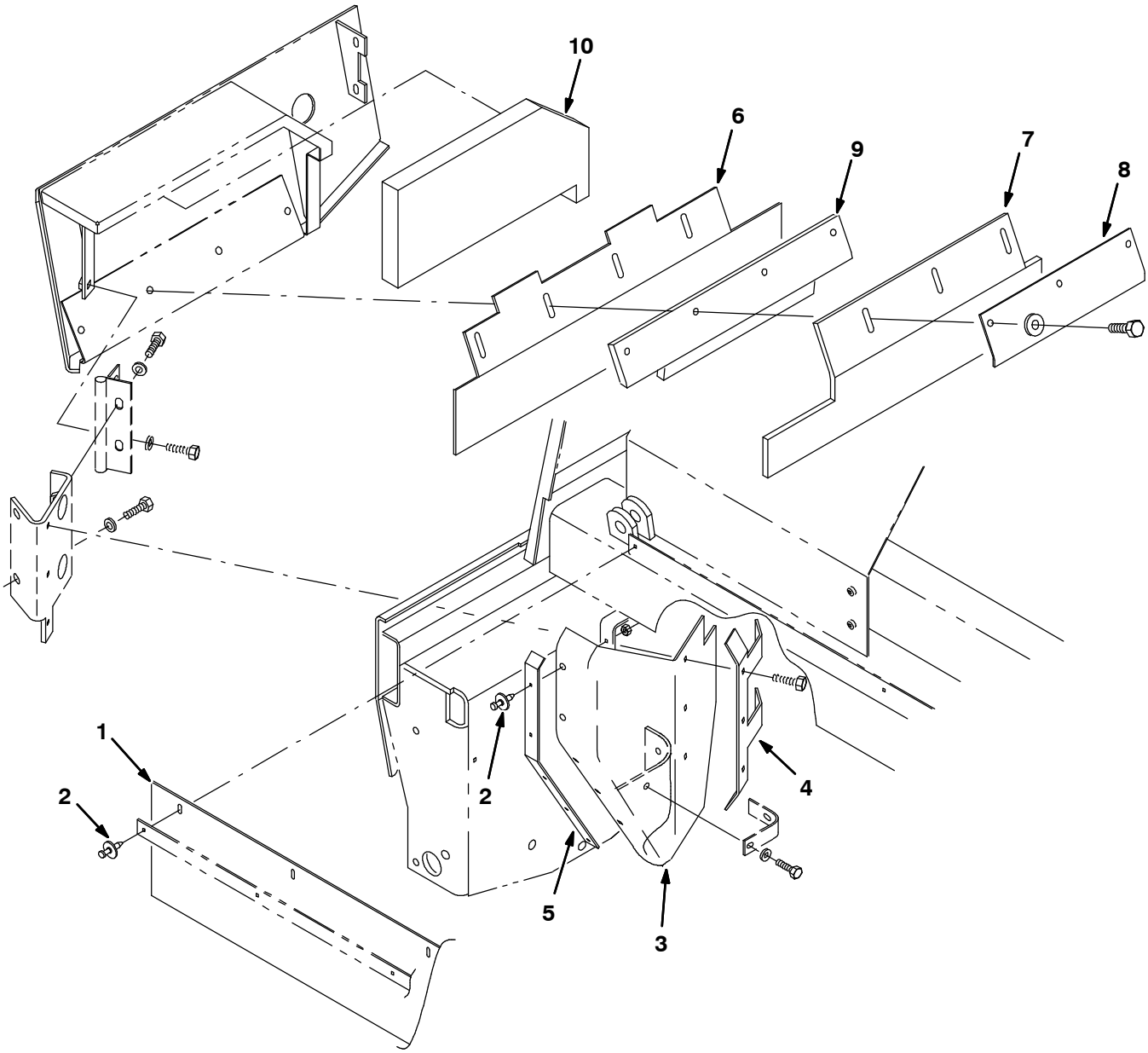

10192/10193

	Ref.	Tennant Part No.	Machine Serial Number	Description	Qty.
∇		70229	(000000–)	Vacuumized Skirt Kit, Main Bru	1
▲	1	56872	(000000–)	Skirt, Hopper, Top	1
▲	2	72968	(000000–)	Rivet, Plastic .250x.898	15
▲	3	70230	(000000–)	Skirt, Deflection, Vac Kit	2
▲	4	70227	(000000–)	Strap, Deflector, Rh	1
▲		70228	(000000–)	Strap, Deflector, Lh (Not Shown)	1
▲	5	56914	(000000–)	Strap	2
▲	6	70222	(000000–)	Skirt, Brush Door, Outer	2
▲	7	70223	(000000–)	Skirt, Brush Door, Inner	2
▲	8	70224	(000000–)	Strip, Retainer	2
▲	9	70225	(000000–)	Angle, Filler	2
▲	10	70226	(000000–)	Seal, Foam, Door	2

Fig. 36 - Documentation Group

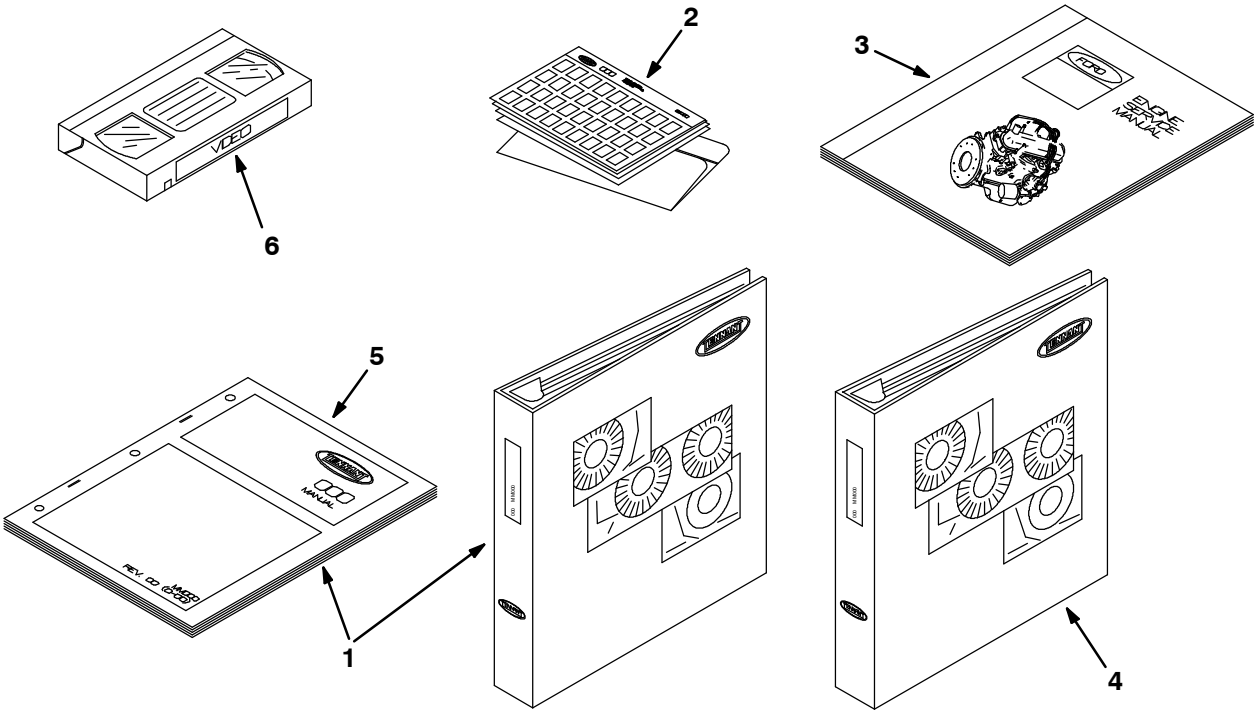

07919/07501

Ref.	Tennant Part No.	Machine Serial Number	Description	Qty.
1	MM300	(000000-)	Manual Pkg 355	1
2	85300	(000000-)	Manual-Fiche Pkg 355G	1
3	38978	(000000-)	Service Manual Vsg Fd	1
4	MM302	(000000-)	Manual Service 355/385	1
5	MM300ES	(000000-)	Manual Op/Mt 355 Spanish	1
5	MM300FR	(000000-)	Manual Op/Mt 355 French	1
5	MM300JP	(000000-)	Manual Op/Mt 355 Japanese	1
6	48841	(000000-)	355L Oper/ Video VHS	1

SECTION 4

CONTENTS PAGE

Fig. 1 – Hydraulic Piston Pump Breakdown, 53603 4-2
Fig. 2 – Hydraulic Piston Pump Breakdown, 74465 4-4
Fig. 3 – Hydraulic Piston Pump Breakdown, 79768 4-6
Fig. 4 – Hydraulic Gear Pump Breakdown, 53554 4-8
Fig. 5 – Hydraulic Motor Breakdown, 59802 4-9
Fig. 6 – Hydraulic Motor Breakdown, 02641 4-10
Fig. 7 – Hydraulic Motor Breakdown, 53434 4-12
Fig. 8 – Hydraulic Motor Breakdown, 74468 4-13
Fig. 9 – Hydraulic Motor Breakdown, 53435 4-14
Fig. 10 – Hydraulic Motor Breakdown, 53485 4-15
Fig. 11 – Hydraulic Steering Valve Breakdown, 54022 4-16
Fig. 12 – Hydraulic Steering Valve Breakdown, 74172 4-17
Fig. 13 – Hydraulic Valve Breakdown, 48751 4-18
Fig. 14 – Hydraulic Valve Breakdown, 53830 4-20
Fig. 15 – Hydraulic Cylinder Breakdown, 74419 4-21
Fig. 16 – Hydraulic Cylinder Breakdown, 53601 4-22

Fig. 1 – Hydraulic Piston Pump Breakdown, 53603

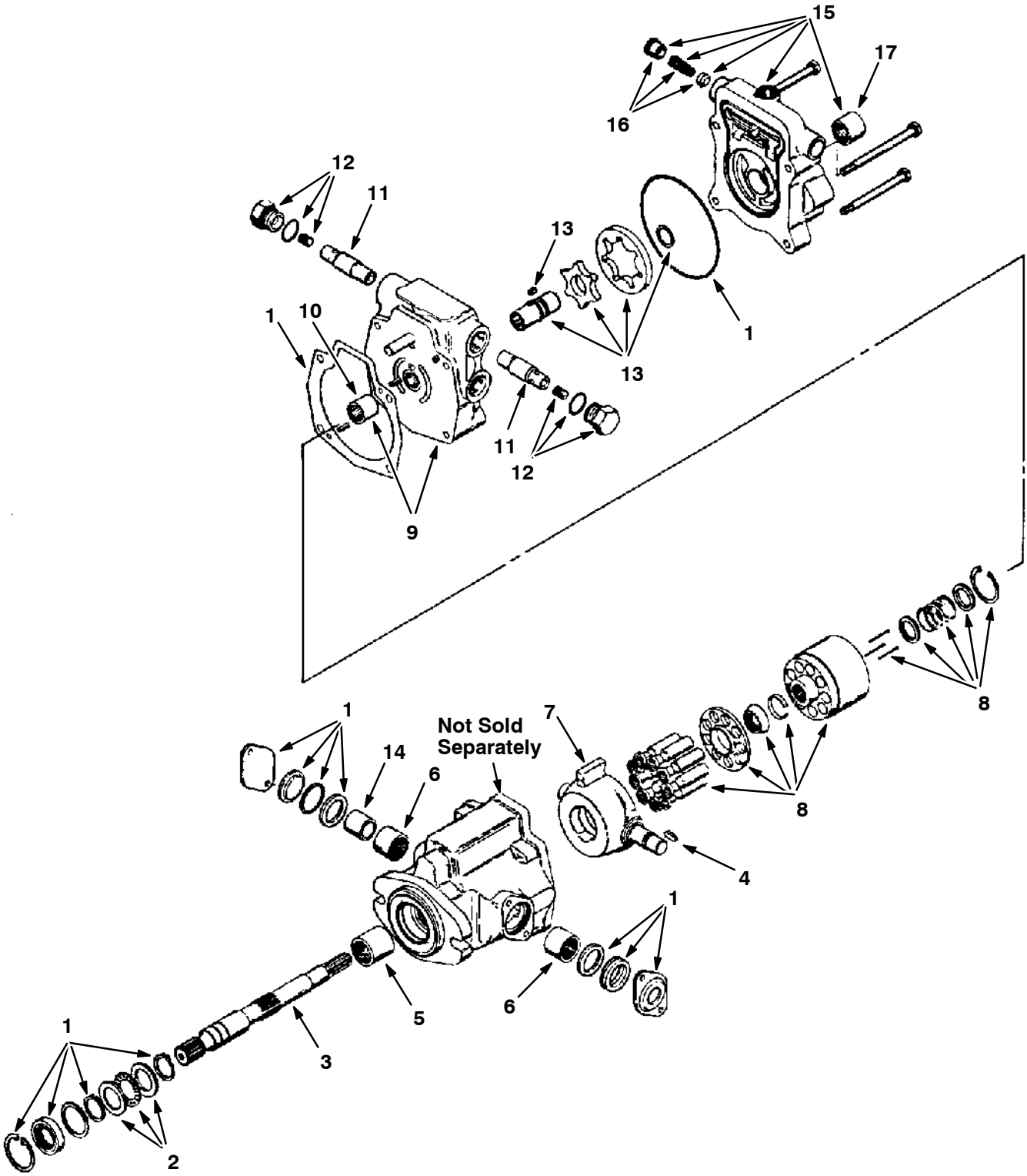

07838-07047

Fig. 1 - Hydraulic Piston Pump Breakdown, 53603

	Ref.	Tennant Part No.	Manufacturer Serial Number	Description	Qty.
∇		53603	(000000-)	Pump, Hydraulic (Repl. by 70133)	1
▲	1	02711	(000000-)	Seal Kit	1
▲	2	55922	(000000-)	Bearing Kit, Thrust	1
▲	3	55931	(000000-)	Shaft, Pump	1
▲	4	02710	(000000-)	Key	1
▲	5	55939	(000000-)	Bearing, Roller	1
▲	6	02709	(000000-)	Bearing, Trunnion	2
▲	7	57897	(000000-)	Plate, Cam	1
▲	8	02706	(000000-)	Rotating Kit	1
▲∇	9	74216	(000000-)	Backplate Assy	1
▲▲	10	55937	(000000-)	Bearing, Roller	1
▲	11	02650	(000000-)	Valve, Relief	2
▲	12	57210	(000000-)	Plug Assembly	2
▲	13	55932	(000000-)	Gerotor and Coupler Assembly	1
▲	14	02705	(000000-)	Bearing, Inner Race	1
▲∇	15	55930	(000000-)	Pump Adaptor Assembly	1
▲▲	16	55906	(000000-)	Valve, Charge Relief	1
▲▲	17	55929	(000000-)	Bearing, Roller	1

Fig. 2 – Hydraulic Piston Pump Breakdown, 74465

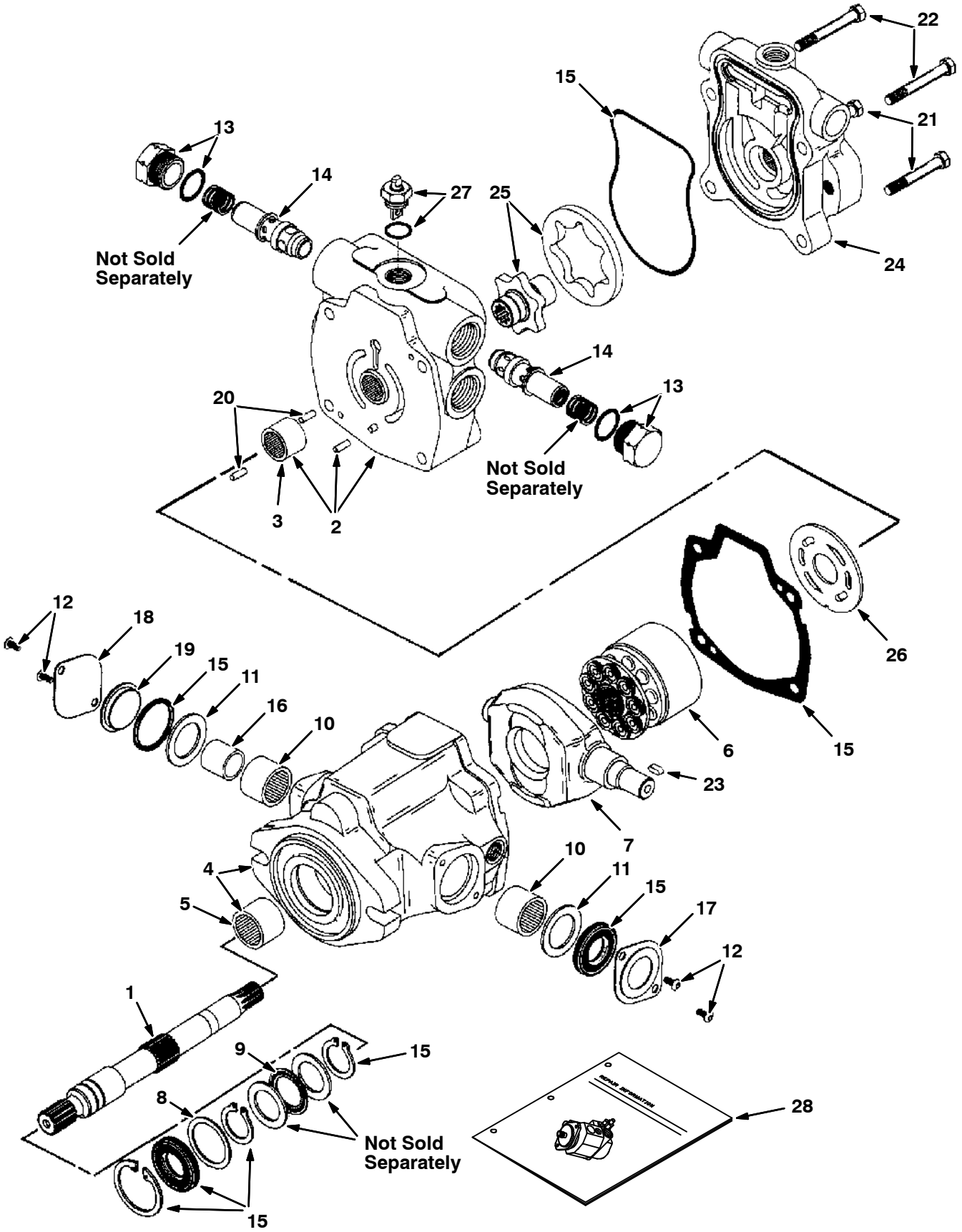

09794-09790-09670

Fig. 2 - Hydraulic Piston Pump Breakdown, 74465

	Ref.	Tennant Part No.	Manufacturer Serial Number	Description	Qty.
∇		74465	(000000-)	Pump, Hyd Piston V 1.24 R 2750 (Repl. by 70179)	1
▲	1	55931	(000000-)	Pump Driveshaft	1
▲∇	2	70094	(000000-)	Backplate Assy Ce	1
▲▲	3	55937	(000000-)	Roller Bearing	1
▲∇	4	70095	(000000-)	Pump Housing Asy Ce	1
▲▲	5	55939	(000000-)	Roller Bearing	1
▲	6	02706	(000000-)	Rotating Kit	1
▲	7	57897	(000000-)	Camplate Ce	1
▲	8	70096	(000000-)	Washer Ce	1
▲	9	55922	(000000-)	Thrustbearing Kit	1
▲	10	02709	(000000-)	Bearing Cam	2
▲	11	70097	(000000-)	Washer Ce	2
▲	12	19320	(000000-)	Scr Pan 06-32X0.38	4
▲	13	57210	(000000-)	Plug Assembly	2
▲	14	02650	(000000-)	Valve-Relief	2
▲	15	70103	(000000-)	Seal Kit, Pump Ce	1
▲	16	02705	(000000-)	Race, Inner Bearing	1
▲	17	52386	(000000-)	Cover	1
▲	18	70098	(000000-)	Cover, Trunion Ce	1
▲	19	70099	(000000-)	Cover, O-Ring Ce	1
▲	20	70100	(000000-)	Pin, Dowel Ce	2
▲	21	19574	(000000-)	Scr Hex .31-18X3.25	2
▲	22	70101	(000000-)	Scr,.31-18X3.75G5Ce	2
▲	23	02710	(000000-)	Key	1
▲	24	55930	(000000-)	Pump Adaptor Assy	1
▲	25	55932	(000000-)	Geroter & Coupler	1
▲	26	70102	(000000-)	Plate, Valve Ce	1
▲	27	74143	(000000-)	Valve Kit, Tow	1
	28	74248	(000000-)	Repair Info	1

Fig. 3 – Hydraulic Piston Pump Breakdown, 79768

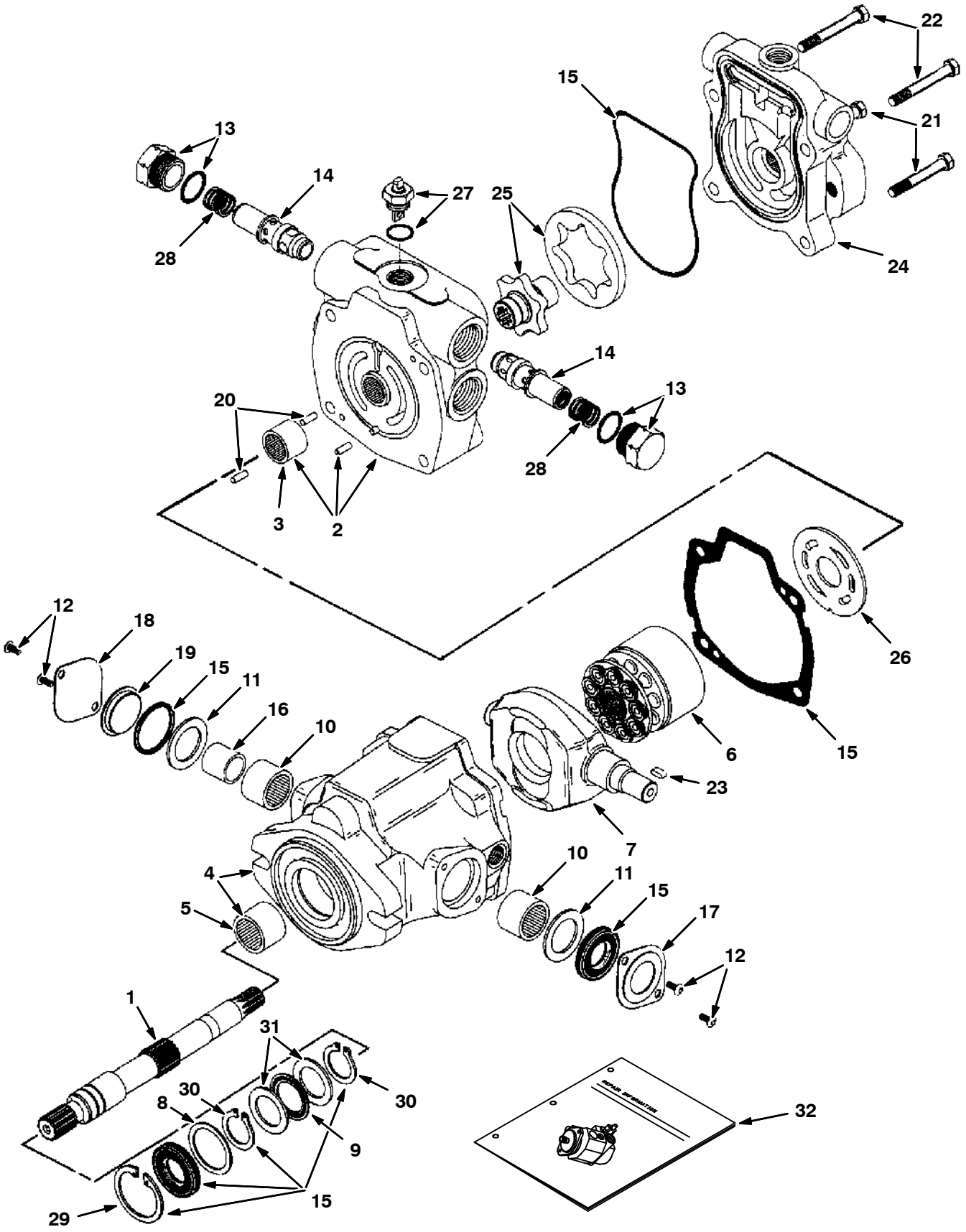

10180-09790-09670

Fig. 3 - Hydraulic Piston Pump Breakdown, 79768

	Ref.	Tennant Part No.	Manufacturer Serial Number	Description	Qty.
∇		79768	(000000-)	Pump, Hyd Piston V 1.24 R 2750	1
▲	1	55931	(000000-)	Pump Driveshaft	1
▲∇	2	70094	(000000-)	Backplate Assy Ce	1
▲▲	3	55937	(000000-)	Roller Bearing	1
▲∇	4	70095	(000000-)	Pump Housing Asy Ce	1
▲▲	5	55939	(000000-)	Roller Bearing	1
▲	6	02706	(000000-)	Rotating Kit	1
▲	7	57897	(000000-)	Camplate Ce	1
▲	8	70096	(000000-)	Washer Ce	1
▲	9	74225	(000000-)	Bearing, Thrust	1
▲	10	02709	(000000-)	Bearing Cam	2
▲	11	70097	(000000-)	Washer Ce	2
▲	12	61891	(000000-)	Screws	4
▲	13	74230	(000000-)	Plug Assembly	2
▲	14	02650	(000000-)	Valve-Relief 2750 PSI	2
▲	15	70103	(000000-)	Seal Kit, Pump Ce	1
▲	16	02705	(000000-)	Race, Inner Bearing	1
▲	17	52386	(000000-)	Cover	1
▲	18	70098	(000000-)	Cover, Trunion Ce	1
▲	19	70099	(000000-)	Cover, O-Ring Ce	1
▲	20	70100	(000000-)	Pin, Dowel Ce	2
▲	21	74235	(000000-)	Scr Hex .31-18X3.25	2
▲	22	70101	(000000-)	Screw, Cap	2
▲	23	74237	(000000-)	Key	1
▲	24	55930	(000000-)	Pump Adaptor Assy	1
▲	25	55932	(000000-)	Geroter & Coupler	1
▲	26	74180	(000000-)	Plate, Valve Ce	1
▲	27	74469	(000000-)	Valve, Dump	1
▲	28	74229	(000000-)	Spring	2
▲	29	55926	(000000-)	Retaining Ring	1
▲	30	55925	(000000-)	Retaining Ring	2
▲	31	74226	(000000-)	Race, Bearing	2
	32	74248	(000000-)	Repair Info	1

Fig. 4 - Hydraulic Gear Pump Breakdown, 53554

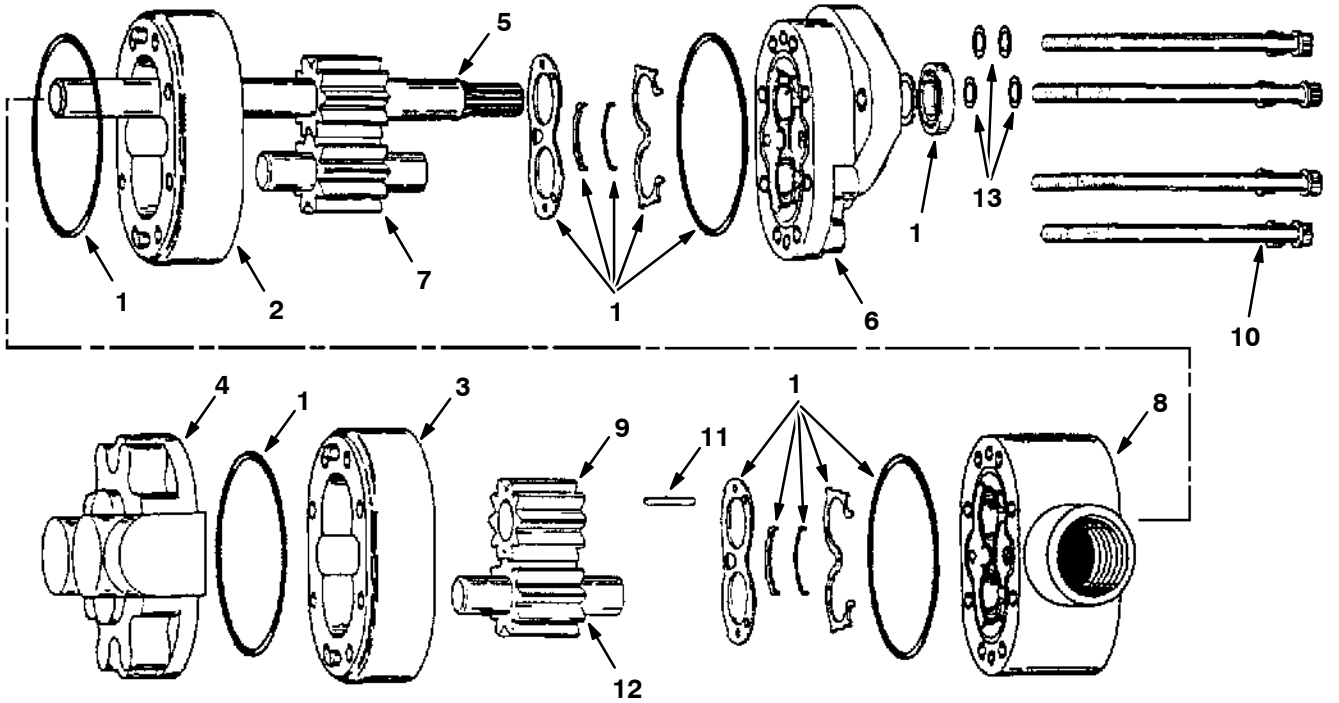

07902-07487

	Ref.	Tennant Part No.	Manufacturer Serial Number	Description	Qty.
∇		53554	(000000-)	Pump, Gear	1
▲	1	57064	(000000-)	Seal Kit	1
▲	2	74150	(000000-)	Body Assembly	1
▲	3	74157	(000000-)	Body Assembly	1
▲	4	58242	(000000-)	Back Plate Assembly	1
▲	5	59379	(000000-)	Drive Shaft Assembly	1
▲	6	74149	(000000-)	Front Plate Assembly	1
▲	7	74151	(000000-)	Idler Gear Assembly	1
▲	8	74152	(000000-)	Adapter Plate Assembly	1
▲	9	74153	(000000-)	Gear, Slip Fit	1
▲	10	74155	(000000-)	Cap Screw	8
▲	11	74156	(000000-)	Key,Round	1
▲	12	74158	(000000-)	Idler Gear Assembly	1
▲	13	74159	(000000-)	Washer	4

Fig. 5 - Hydraulic Motor Breakdown, 59802

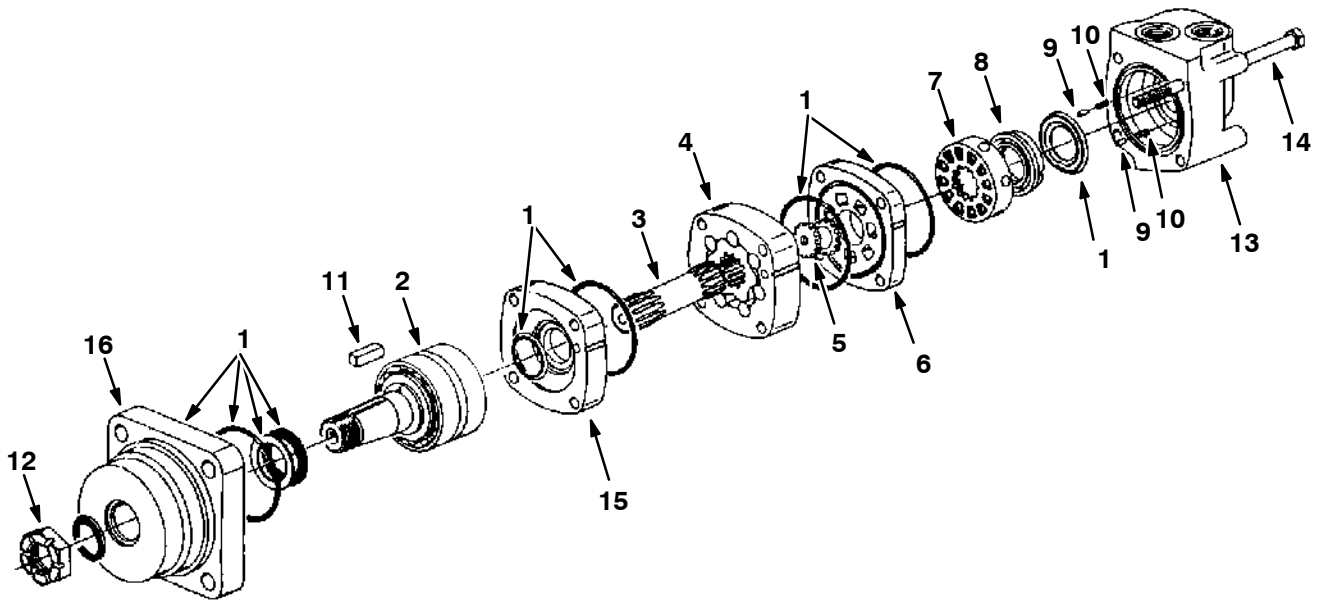

07905-03455

	Ref.	Tennant Part No.	Manufacturer Serial Number	Description	Qty.
∇		59802	(000000-)	Motor, Hydraulic (Repl by 02641)	1
▲	1	58247	(000000-)	Seal Kit	1
▲	2	02644	(000000-)	Shaft and Bearing Kit	1
▲	3	02603	(000000-)	Drive	1
▲	4	02645	(000000-)	Geroler	1
▲	5	57370	(000000-)	Valve Drive	1
02646 ▲	6	~~74107~~	(000000-)	Valve Plate	1
▲	7	02647	(000000-)	Valve	1
▲	8	57373	(000000-)	Balance Ring	1
▲	9	57374	(000000-)	Pin	2
▲	10	57375	(000000-)	Spring	2
▲	11	38315	(000000-)	Key	1
▲	12	38490	(000000-)	Nut	1
▲	13	74119	(000000-)	Housing, Valve	1
▲	14	74120	(000000-)	Bolt	4
▲	15	51417	(000000-)	Plate	1
▲	16	74104	(000000-)	Housing, Bearing	1

Fig. 6 - Hydraulic Motor Breakdown, 02641

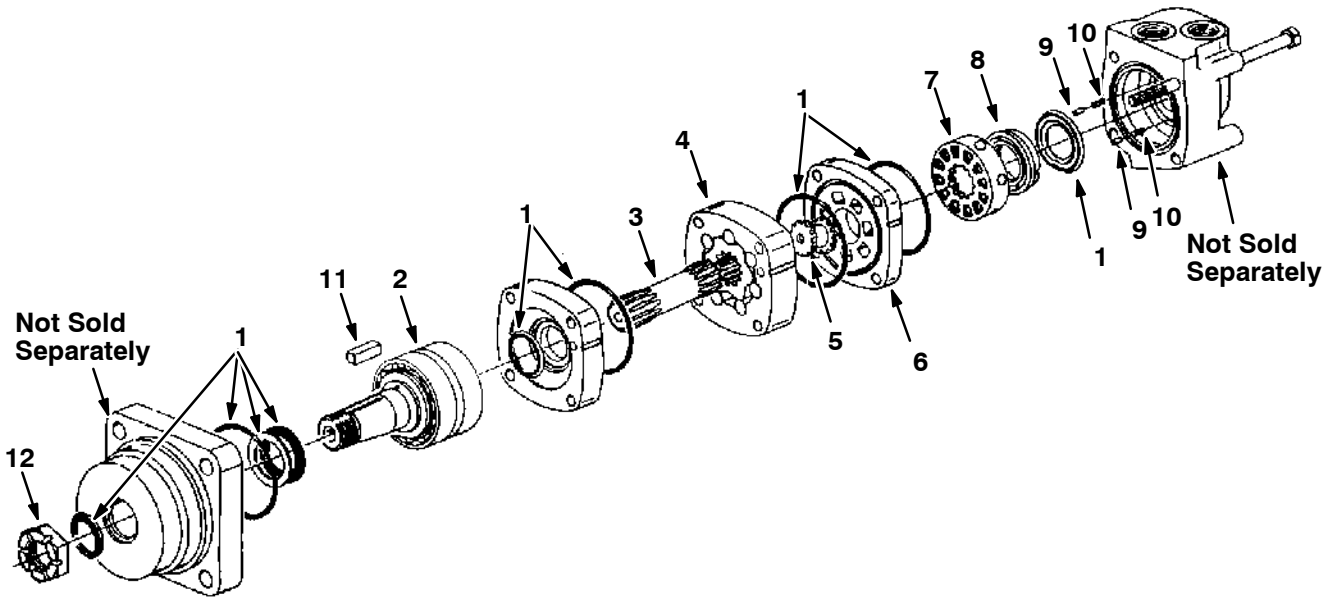

03456-03455

Fig. 6 - Hydraulic Motor Breakdown, 02641

	Ref.	Tennant Part No.	Manufacturer Serial Number	Description	Qty.
∇		02641	(000000-)	Motor, Hydraulic	1
▲	1	02643	(000000-)	Seal Kit	1
▲	2	02644	(000000-)	Shaft and Bearing Kit	1
▲	3	02603	(000000-)	Drive	1
▲	4	02645	(000000-)	Geroler	1
▲	5	57370	(000000-)	Valve Drive	1
▲	6	02646	(000000-)	Valve Plate	1
▲	7	02647	(000000-)	Valve	1
▲	8	57373	(000000-)	Balance Ring	1
▲	9	57374	(000000-)	Pin	2
▲	10	57375	(000000-)	Spring	2
▲	11	38315	(000000-)	Key	1
▲	12	38490	(000000-)	Nut	1

Fig. 7 - Hydraulic Motor Breakdown, 53434

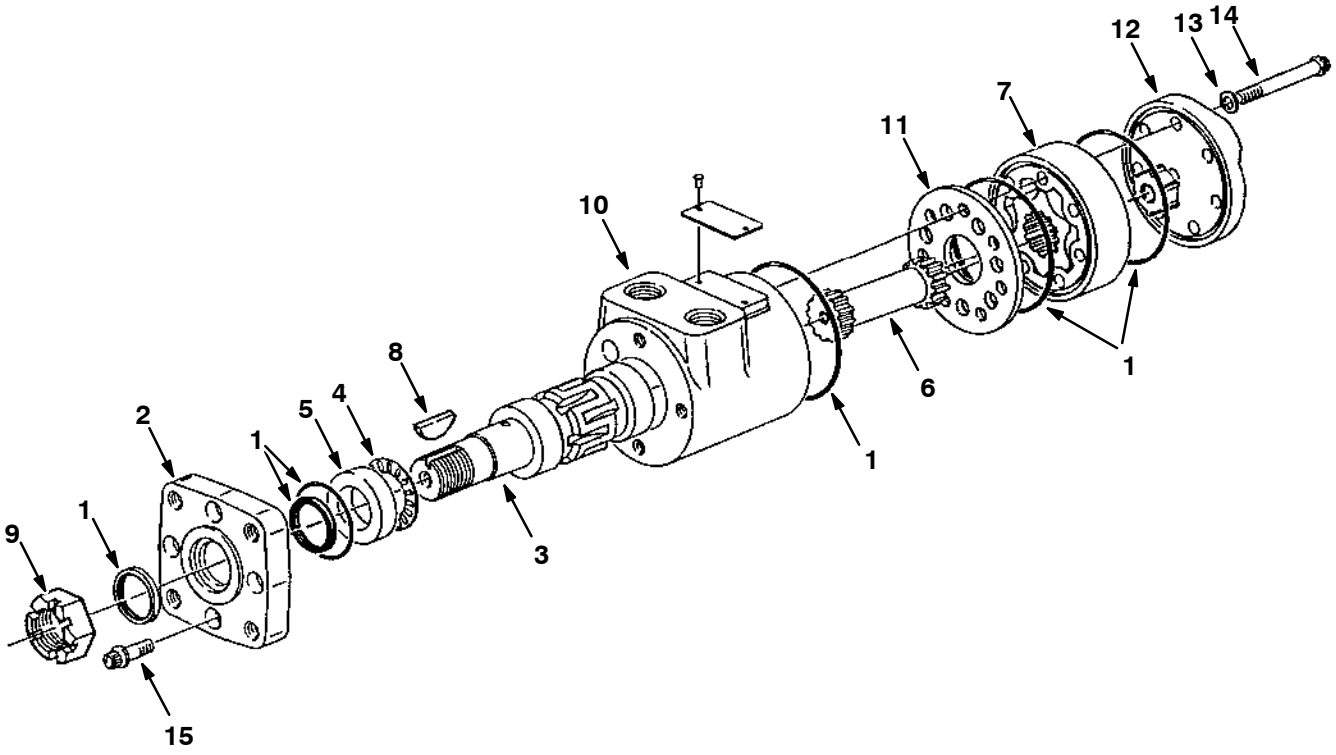

07907-08925

	Ref.	Tennant Part No.	Manufacturer Serial Number	Description	Qty.
▽		53434	(000000-)	Motor, Hydraulic	1
▲	1	61490	(000000-)	Seal Kit	1
▲	2	31354	(000000-)	Flange, Mounting	1
▲	3	31375	(000000-)	Output Shaft	1
▲	4	45628	(000000-)	Bearing	1
▲	5	16695	(000000-)	Race, Thrust	1
▲	6	34176	(000000-)	Drive	1
▲	7	31381	(000000-)	Gerotor Set	1
▲	8	00500-15	(000000-)	Key, Woodruff	1
▲	9	39527	(000000-)	Nut, slotted Hex	1
▲	10	74092	(000000-)	Housing	1
▲	11	74094	(000000-)	Spacer Plate	1
▲	12	74095	(000000-)	End Cap	1
▲	13	74096	(000000-)	Washer	5
▲	14	74097	(000000-)	Screw,Cap	5
▲	15	37555	(000000-)	Screw	4

Fig. 8 - Hydraulic Motor Breakdown, 74468

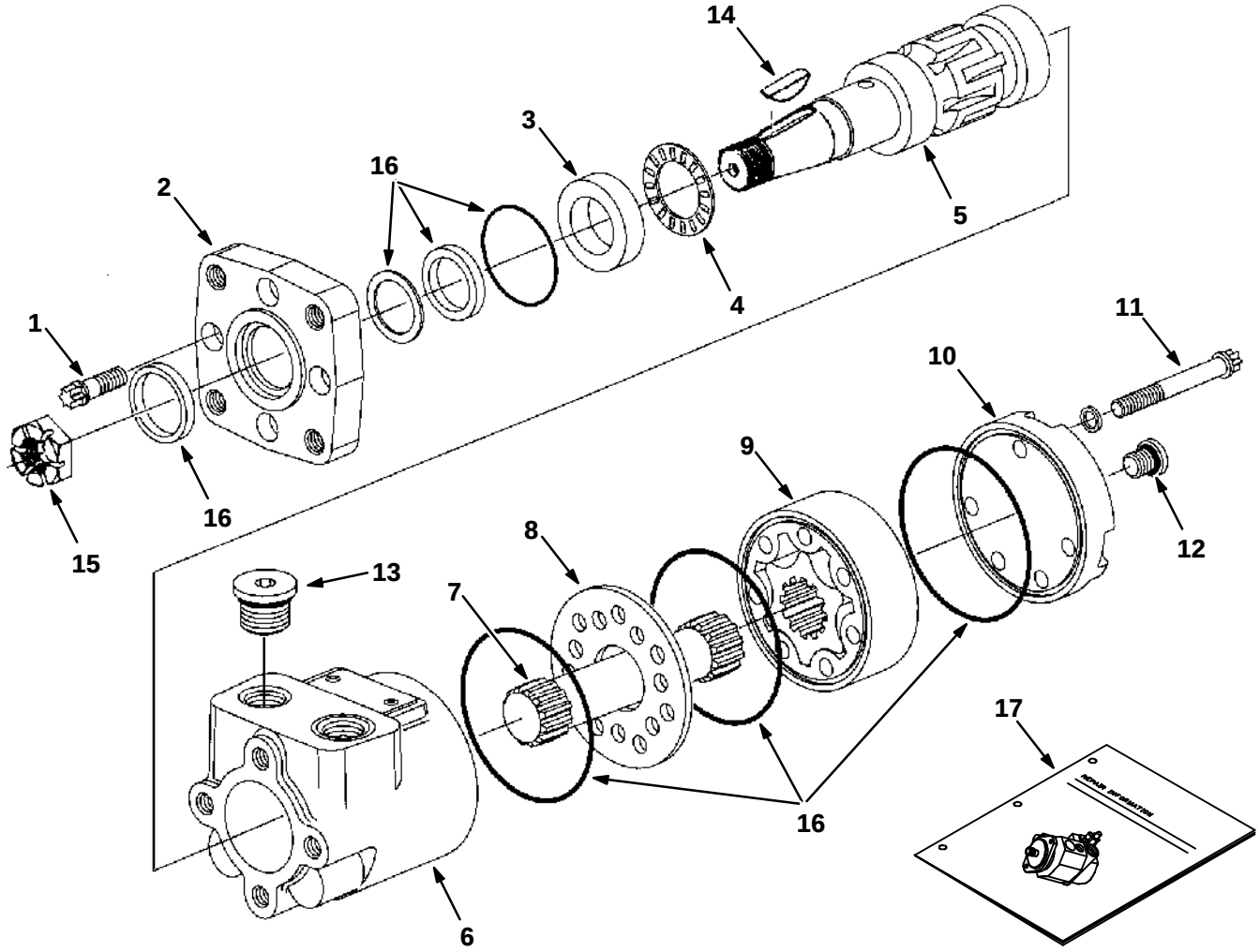

09669-09606-09670

	Ref.	Tennant Part No.	Manufacturer Serial Number	Description	Qty.
		74468	(000000-)	Motor, Hyd Gear In 02.8 B 1500	1
▲	1	37555	(000000-)	Cap, Screw	4
▲	2	31354	(000000-)	Flange Mounting	1
▲	3	16695	(000000-)	Race Thrust	1
▲	4	45628	(000000-)	Thrust Bearing	1
▲	5	31375	(000000-)	Shaft, Output	1
▲	6	74100	(000000-)	Housing Cl	1
▲	7	34176	(000000-)	Drive	1
▲	8	74094	(000000-)	Spacer Plate Cl	1
▲	9	31381	(000000-)	Gerotor Set	1
▲	10	74095	(000000-)	Spacer Plate Cl	1
▲	11	74174	(000000-)	Cap, Screw Cl	5
▲	12	74098	(000000-)	Plug Assembly Ph	1
▲	13	74099	(000000-)	Plug Assembly Ph	2
▲	14	00500-15	(000000-)	Key-Wdruff 0.25 1.00 Asa#0808	1
▲	15	39527	(000000-)	Nut-Hxslot .75-16 Pltd	1
▲	16	61490	(000000-)	Seal Replmt Kit	1
	17	74250	(000000-)	Repair Info. Cl	1

Fig. 9 – Hydraulic Motor Breakdown, 53435

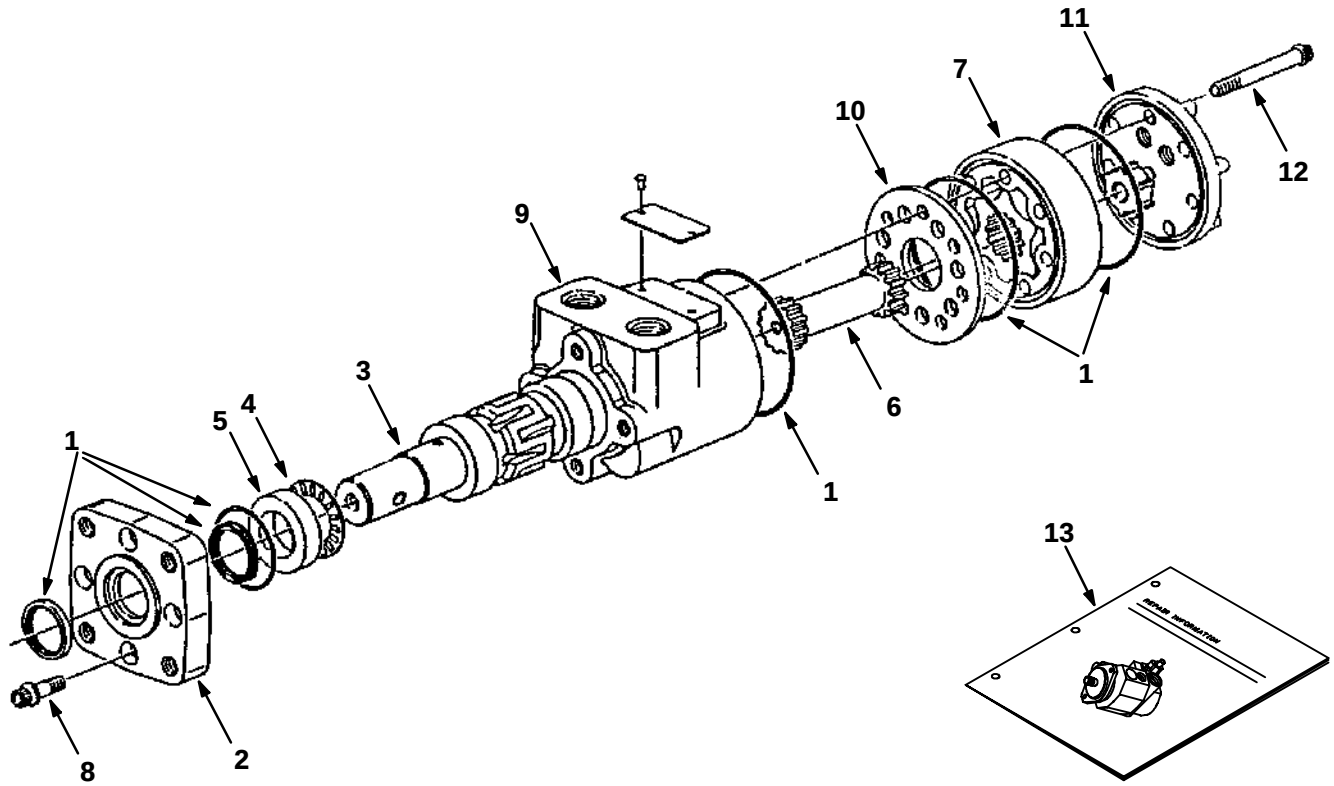

07908–08926–09670

	Ref.	Tennant Part No.	Manufacturer Serial Number	Description	Qty.
		53435	(000000–)	Motor, Hydraulic	1
▲	1	61490	(000000–)	Seal Kit	1
▲	2	31354	(000000–)	Flange, Mounting	1
▲	3	31373	(000000–)	Output Shaft	1
▲	4	45628	(000000–)	Bearing Thrust	1
▲	5	16695	(000000–)	Race, Thrust	1
▲	6	31377	(000000–)	Drive	1
▲	7	31384	(000000–)	Gerotor Set	1
▲	8	37555	(000000–)	Screw	4
▲	9	74100	(000000–)	Housing	1
▲	10	74094	(000000–)	Spacer Plate	1
▲	11	74101	(000000–)	End Cap	1
▲	12	74102	(000000–)	Screw, Cap	5
	13	74250	(000000–)	Repair Info.	1

Fig. 10 - Hydraulic Motor Breakdown, 53485

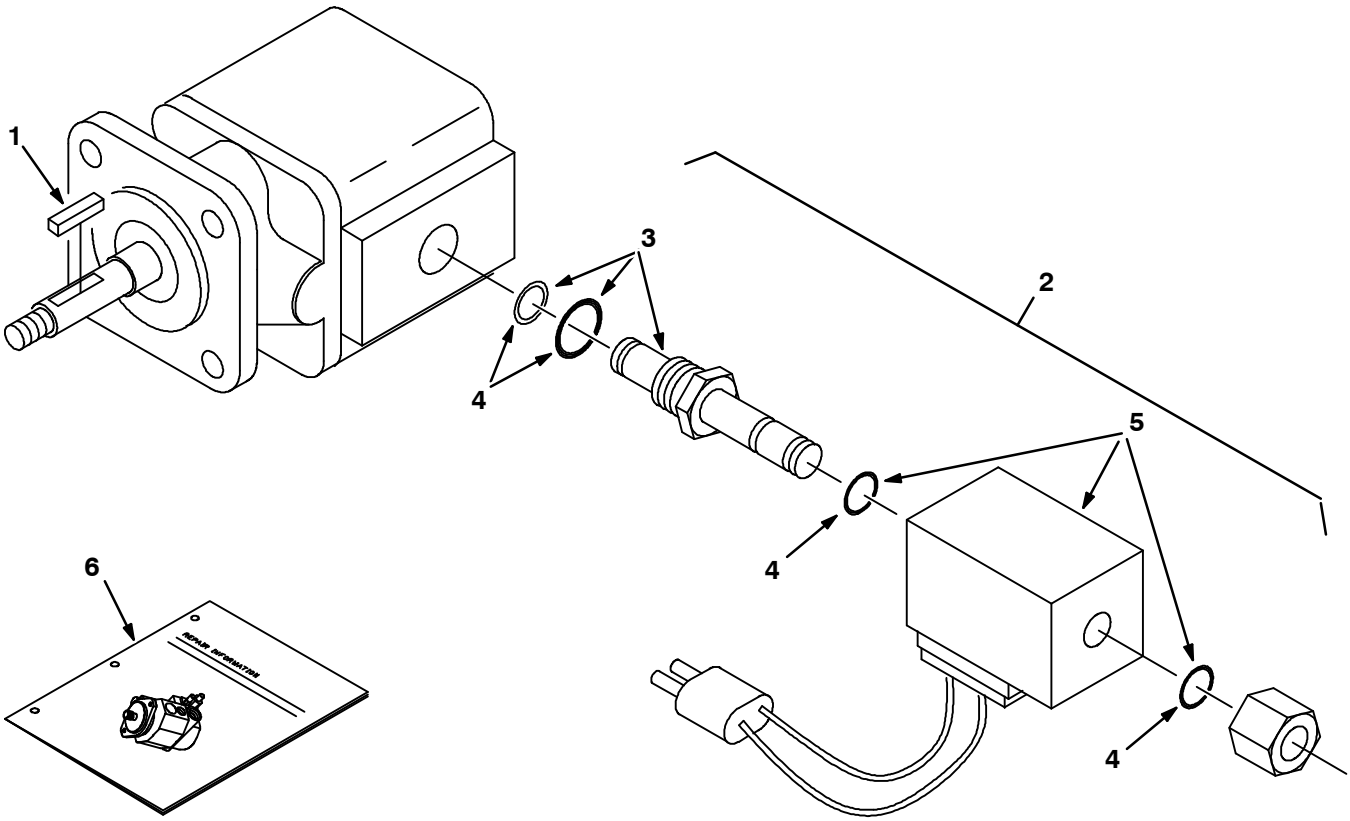

07909-07490-09670

	Ref.	Tennant Part No.	Manufacturer Serial Number	Description	Qty.
∇		53485	(000000-)	Motor, Hydraulic	1
▲		74233	(000000-)	Seal Kit, Motor	1
▲	1	00966	(000000-)	Key	1
▲∇	2	54095	(000000-)	Valve Assembly, Solenoid	1
▲▲	3	59378	(000000-)	Cartridge, Solenoid Valve	1
▲▲	4	48813	(000000-)	Seal Kit, One Cartridge	1
▲▲	5	35493	(000000-)	Coil	1
	6	IB3614	(000000-)	Repair Info.	1

Fig. 11 - Hydraulic Steering Valve Breakdown, 54022

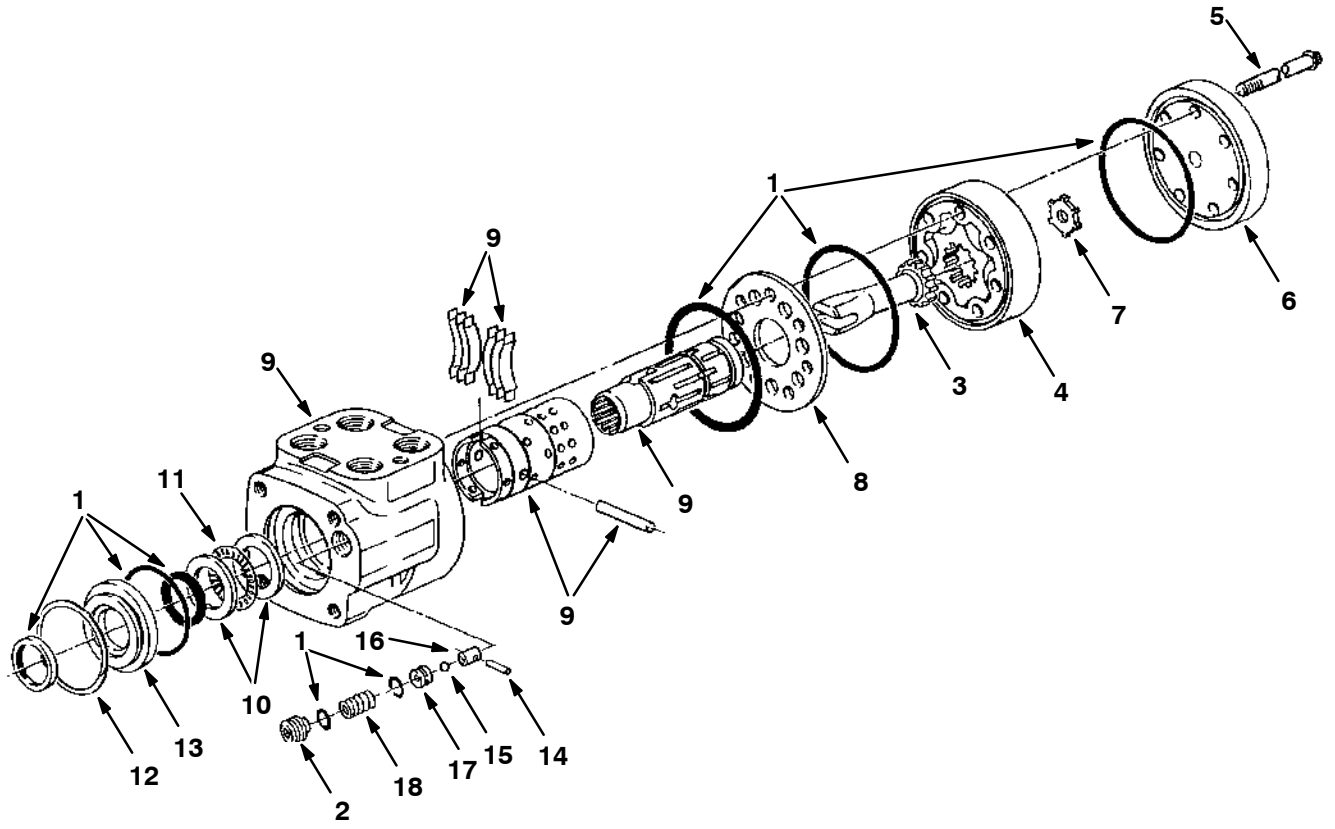

07910-07491

	Ref.	Tennant Part No.	Manufacturer Serial Number	Description	Qty.
∇		54022	(000000-)	Valve, Hydraulic Steering (Repl by 74172)	1
▲	1	57152	(000000-)	Seal Kit	1
▲	2	74118	(000000-)	Plug	1
▲	3	58596	(000000-)	Drive	1
▲	4	57156	(000000-)	Gerotor	1
▲	5	74097	(000000-)	Cap, Screw	7
▲	6	74103	(000000-)	Cap, End	1
▲	7	74105	(000000-)	Spacer	1
▲	8	74106	(000000-)	Spacer Plate	1
▲	9	74108	(000000-)	Control Assembly	1
▲	10	74109	(000000-)	Race, Bearing	2
▲	11	74110	(000000-)	Bearing, Needle	1
▲	12	74111	(000000-)	Ring, Retaining	1
▲	13	74112	(000000-)	Retainer, Front	1
▲	14	74113	(000000-)	Pin, Spring	1
▲	15	74114	(000000-)	Ball, Check	1
▲	16	74115	(000000-)	Seat, Ball	1
▲	17	74116	(000000-)	Poppet	1
▲	18	74117	(000000-)	Spring	1

Fig. 12 - Hydraulic Steering Valve Breakdown, 74172

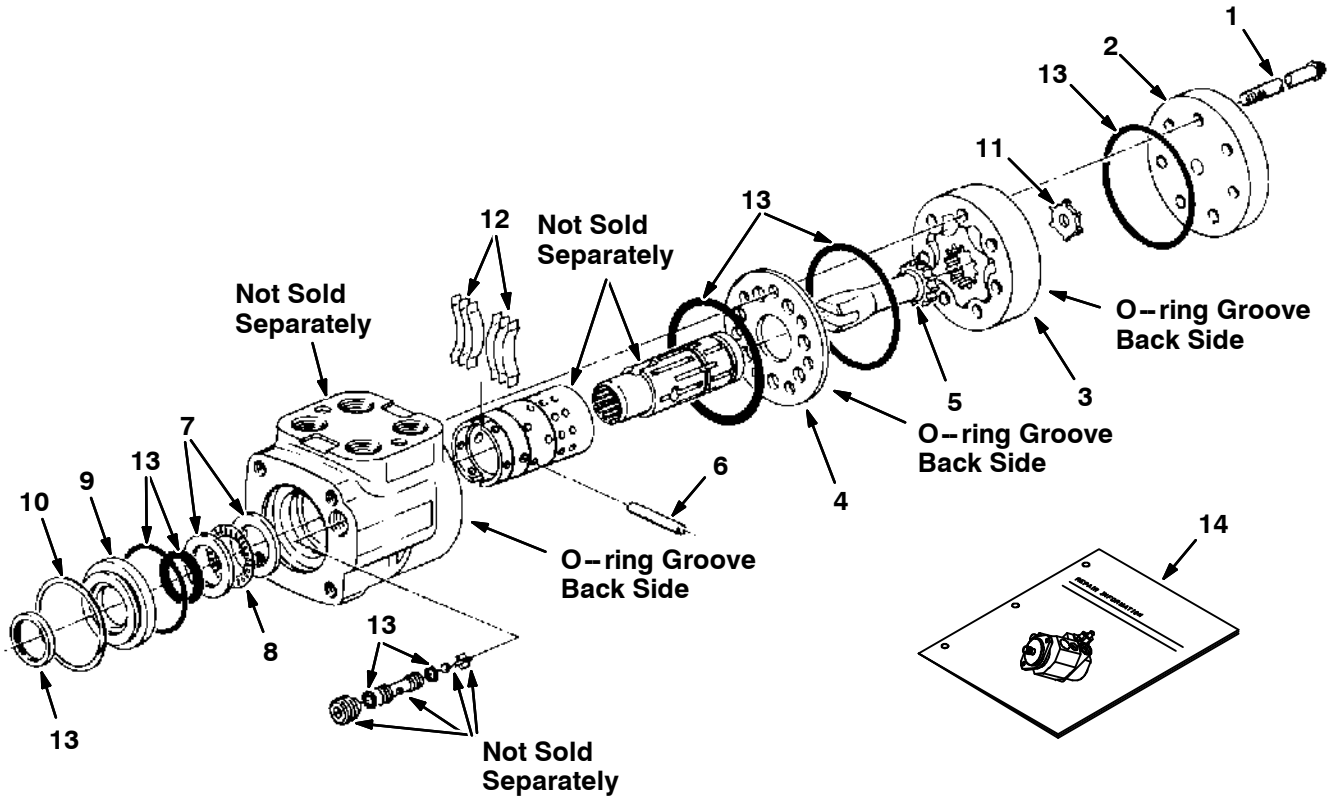

10174-09936-09670

	Ref.	Tennant Part No.	Manufacturer Serial Number	Description	Qty.
▽		74172	(000000-)	Valve, Hydraulic Steering	1
▲	1	65241	(000000-)	Cap, Screw	7
▲	2	74181	(000000-)	Cap, End	1
▲	3	57156	(000000-)	Gerotor Set	1
▲	4	74182	(000000-)	Plate, Wear	1
▲	5	58596	(000000-)	Drive	1
▲	6	74218	(000000-)	Pin	1
▲	7	74109	(000000-)	Race, Bearing	2
▲	8	74110	(000000-)	Bearing, Needle	1
▲	9	74112	(000000-)	Retainer, Front	1
▲	10	74111	(000000-)	Ring, Retaining	1
▲	11	74105	(000000-)	Spacer	1
▲	12	74195	(000000-)	Spring Kit	1
▲	13	74190	(000000-)	Seal Kit	1
	14	74251	(000000-)	Repair Info	1

Fig. 13 – Hydraulic Valve Breakdown, 48751

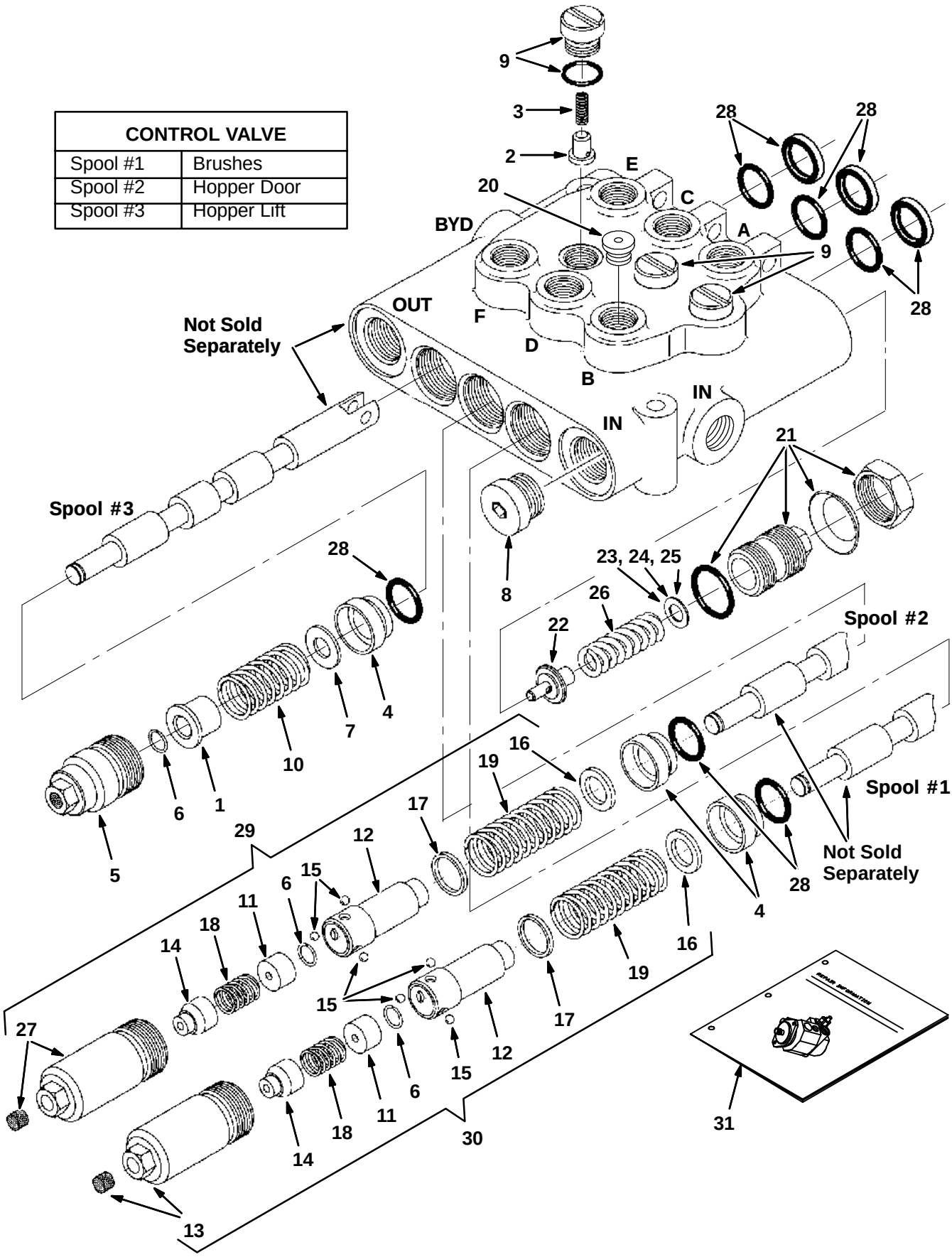

10411-10412

Fig. 13 - Hydraulic Valve Breakdown, 48751

	Ref.	Tennant Part No.	Manufacturer Serial Number	Description	Qty.
∇		48751	(000000-)	Valve, Hyd Cntrl Man	1
▲	1	79785	(000000-)	Spacer	1
▲	2	79786	(000000-)	Plunger	1
▲	3	79787	(000000-)	Spring	1
▲	4	79788	(000000-)	Bushing	3
▲	5	79789	(000000-)	Cap Assembly	1
▲	6	79792	(000000-)	Retaining Rng	3
▲	7	79794	(000000-)	Washer	1
▲	8	13907	(000000-)	Plug, #8 O-Ring	1
▲	9	79795	(000000-)	Plug & O-Ring	3
▲	10	79796	(000000-)	Spring	1
▲	11	79801	(000000-)	Spacer	2
▲	12	79802	(000000-)	Detent Adaptr	2
▲	13	79803	(000000-)	Cap Assembly	1
▲	14	79800	(000000-)	Cone	2
▲	15	79804	(000000-)	Ball	6
▲	16	79806	(000000-)	Washer	2
▲	17	79805	(000000-)	Washer	2
▲	18	79807	(000000-)	Spring	2
▲	19	79808	(000000-)	Spring	2
▲	20	13904	(000000-)	Plug, #6 O-Ring	2
▲	21	79790	(000000-)	Plug Assembly	1
▲	22	79791	(000000-)	Poppet	1
▲	23	79793	(000000-)	Shim .035 Thk	-
▲	24	79798	(000000-)	Shim .015 Thk	-
▲	25	79799	(000000-)	Shim .010 Thk	-
▲	26	21915	(000000-)	Spring	1
▲	27	79821	(000000-)	Cap Assembly	1
▲	28	79812	(000000-)	Seal Kit, Vlv	1
▲	29	79813	(000000-)	Kit, Detent Out	1
▲	30	79815	(000000-)	Kit, Detent I&O	1
	31	79820	(000000-)	Repair Info, Valve	1

Fig. 14 - Hydraulic Valve Breakdown, 53830

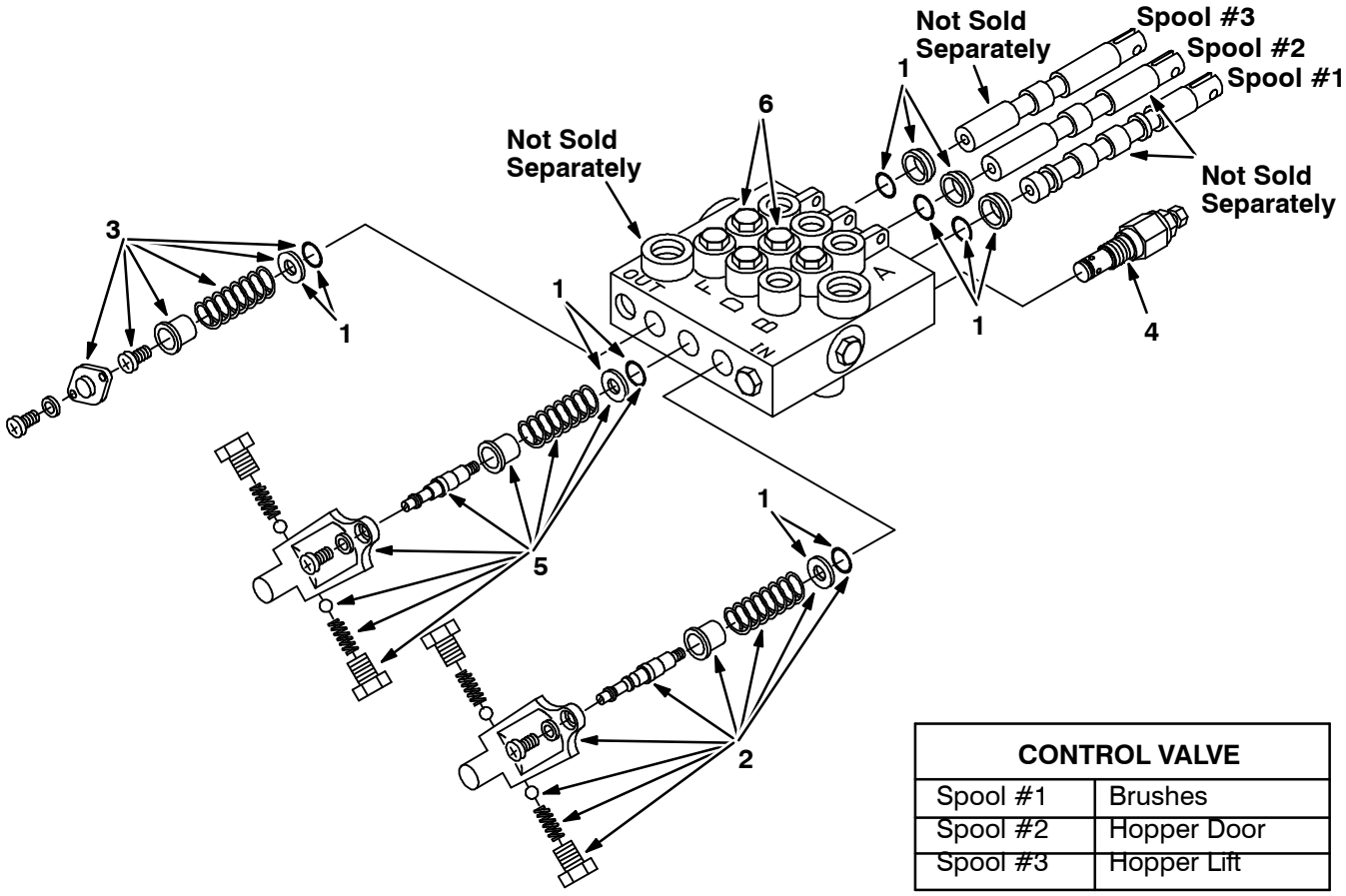

CONTROL VALVE	
Spool #1	Brushes
Spool #2	Hopper Door
Spool #3	Hopper Lift

07911-07492

	Ref.	Tennant Part No.	Manufacturer Serial Number	Description	Qty.
∇		53830	(000000-)	Valve, Hydraulic (Repl by 48761)	1
▲	1	58845	(000000-)	Seal Kit	1
▲	2	58689	(000000-)	Detent Kit, Spool #1	1
▲	3	74126	(000000-)	Spring Kit, Spool #3	1
▲	4	58847	(000000-)	Relief Assembly	1
▲	5	58843	(000000-)	Detent Kit, Spool #2	1
▲	6	74127	(000000-)	Check Kit, LD DK	2

Fig. 15 - Hydraulic Cylinder Breakdown, 74419

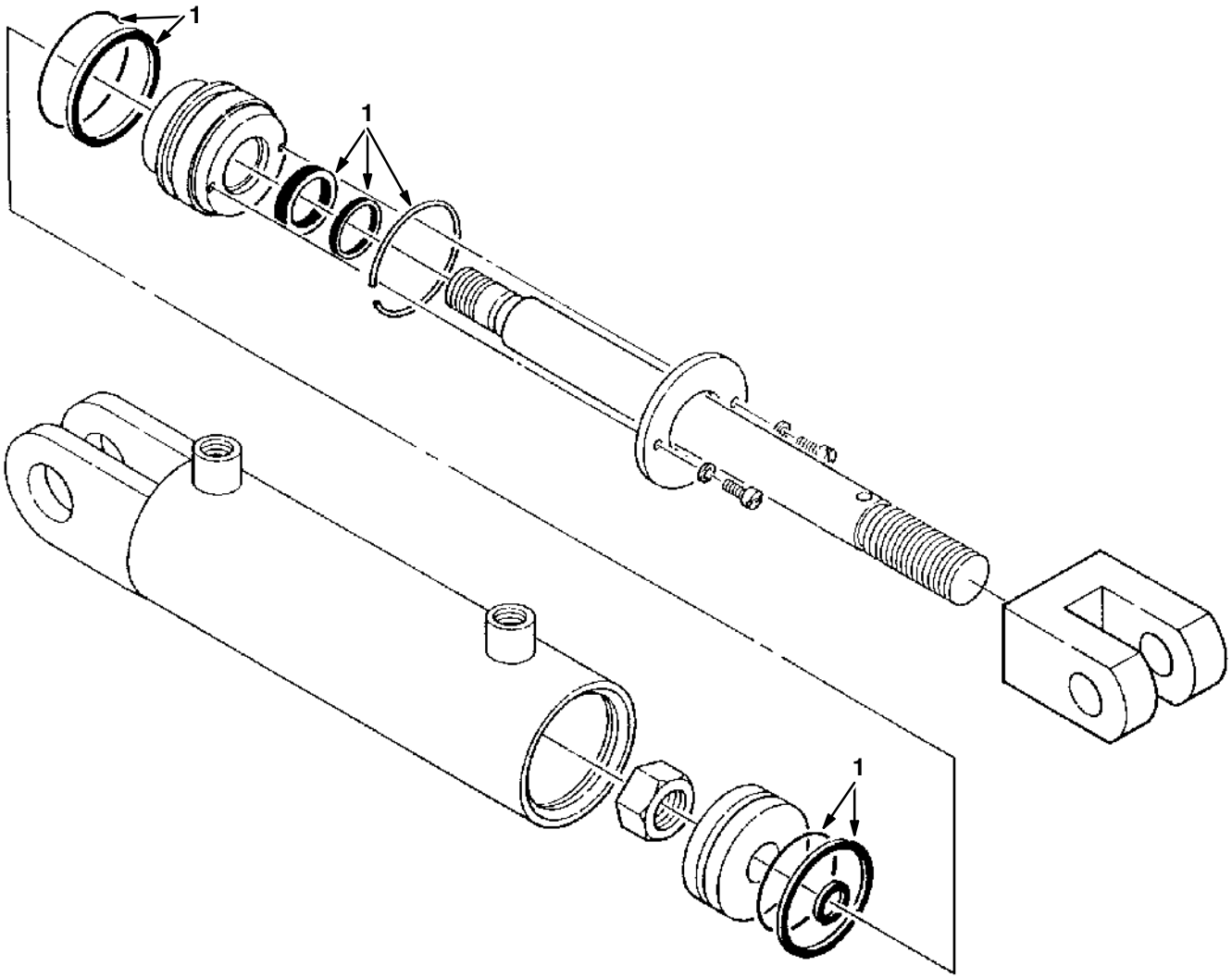

07912-07493

	Ref.	Tennant Part No.	Manufacturer Serial Number	Description	Qty.
∇		74419	(000000-)	Cylinder, Hydraulic	1
▲	1	59335	(000000-)	Seal Kit	1

Fig. 16 – Hydraulic Cylinder Breakdown, 53601

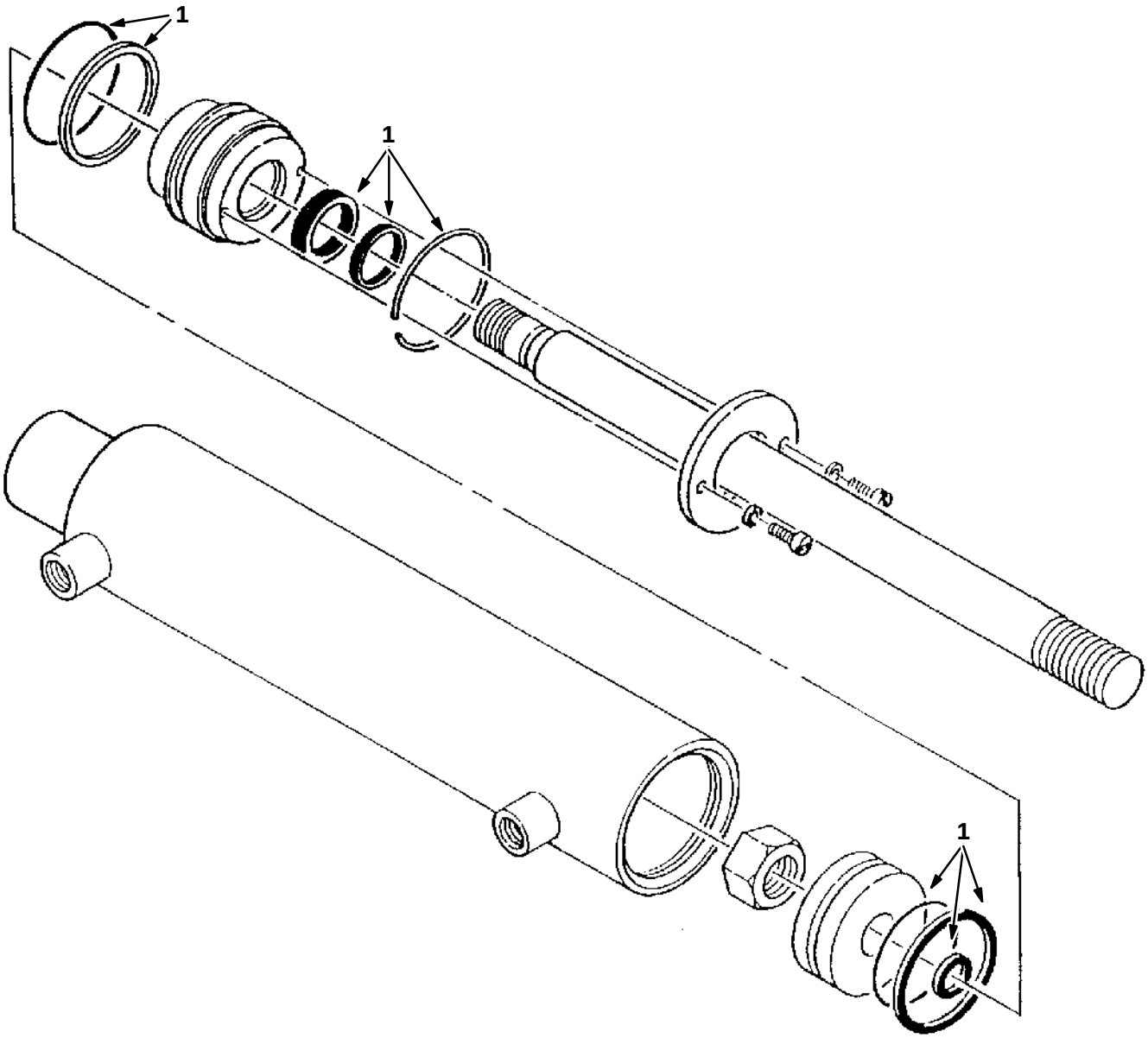

07913–07494

	Ref.	Tennant Part No.	Manufacturer Serial Number	Description	Qty.
		53601	(000000–)	Cylinder, Hydraulic	1
▲	1	04483	(000000–)	Seal Kit	1

SECTION 5

CONTENTS **PAGE**

Fig. 1 – Cylinder Head, Valves Group 5-2
Fig. 2 – Cylinder Block Group 5-4
Fig. 3 – Camshaft and Valve Control Group 5-6
Fig. 4 – Crankshaft and Piston Group 5-8
Fig. 5 – Oil Pump and Oil Pan Group 5-10
Fig. 6 – Manifold Group 5-12
Fig. 7 – Front Cover Assembly Group 5-13
Fig. 8 – Water Pump Group 5-14
Fig. 9 – Distributorless Ignition Group 5-15
Fig. 10 – Gaskets Group 5-16
Fig. 11 – Flywheel Group 5-17

Fig. 1 - Cylinder Head, Valves Group

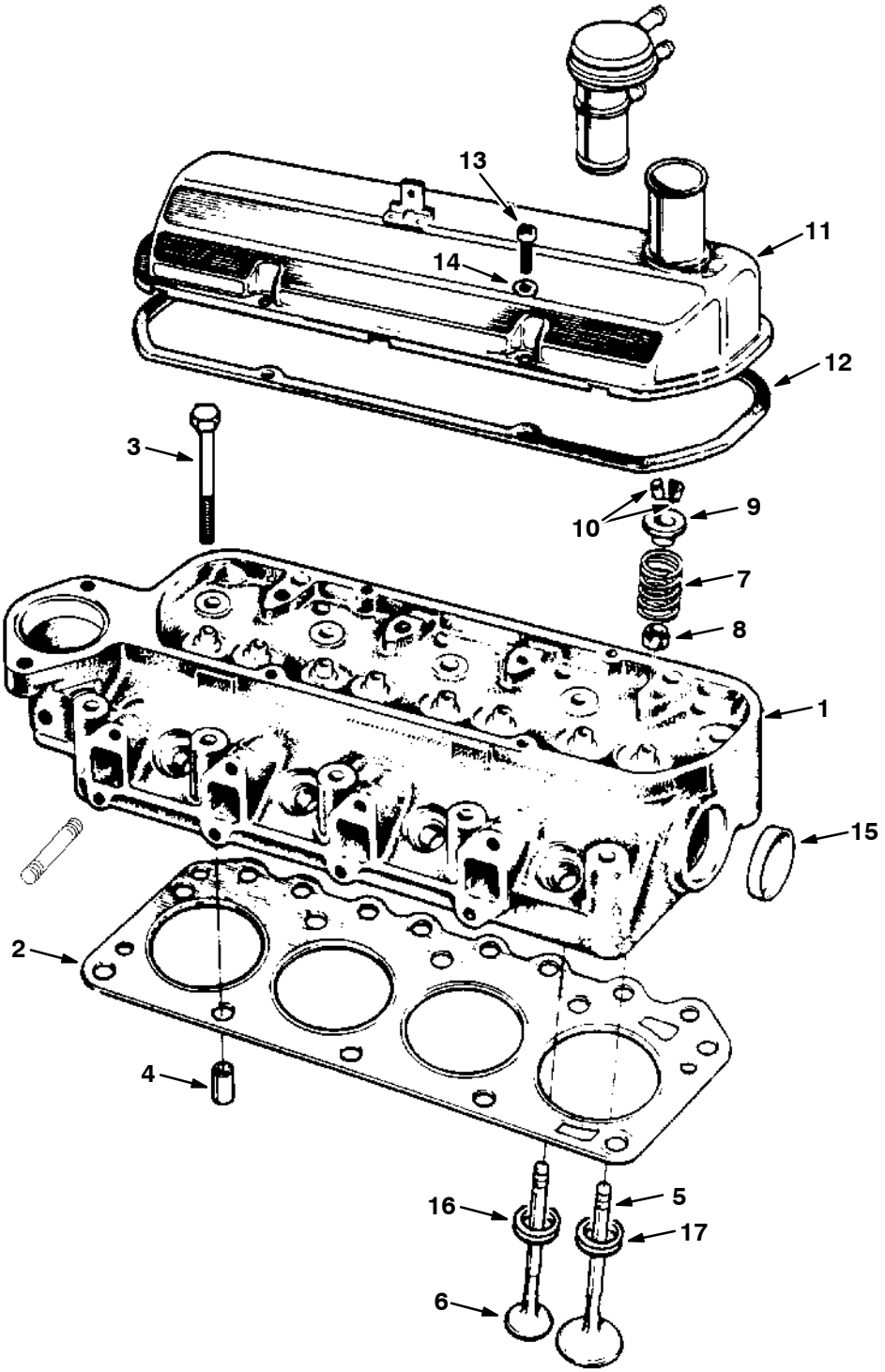

07943-04702

Fig. 1 - Cylinder Head, Valves Group

Ref.	Tennant Part No.	Ford Part Number	Description	Qty.
1	41980	89BM-6049-HB	Head Assembly, Cylinder	1
2	41981	89BM-6051-B2C	Gasket, Cylinder Head	1
3	36297	89BM-6065-DA	Bolt, Cylinder Head	10
4	36298	E840126-S	Dowel, Cylinder Head to Block	2
5	41982	89BM-6507-AA	Valve, Intake, Std	-
6	36307	89BM-6505-CA	Valve, Exhaust, Std	4
7	36315	89BM-6513-AA	Spring, Valve	8
8	61538	88WM-6571-BB	Seal, Valve Stem	8
9	36318	89BM-6A536-AA	Retainer	8
10	36319	88WM-6518-AA	Lock, Valve Spring	16
11	61539	91BM-6582-GA	Cover, Rocker Arm	1
12	07705	77BM-6584-CA	Gasket, Rocker Arm Cover	1
13	36324	E800516-S72	Screw, Rocker Cover to Head	4
14	36325	E6330024-S201	Washer, Flat, 6 mm	4
15	37313	DORY-6026-A	Plug	1
16	36330	89BM-6057-A2E	Insert, Exhaust Valve Seat	4
17	41984	89BM-6056-A1F	Insert, Intake Valve Seat	4

Fig. 2 - Cylinder Block Group

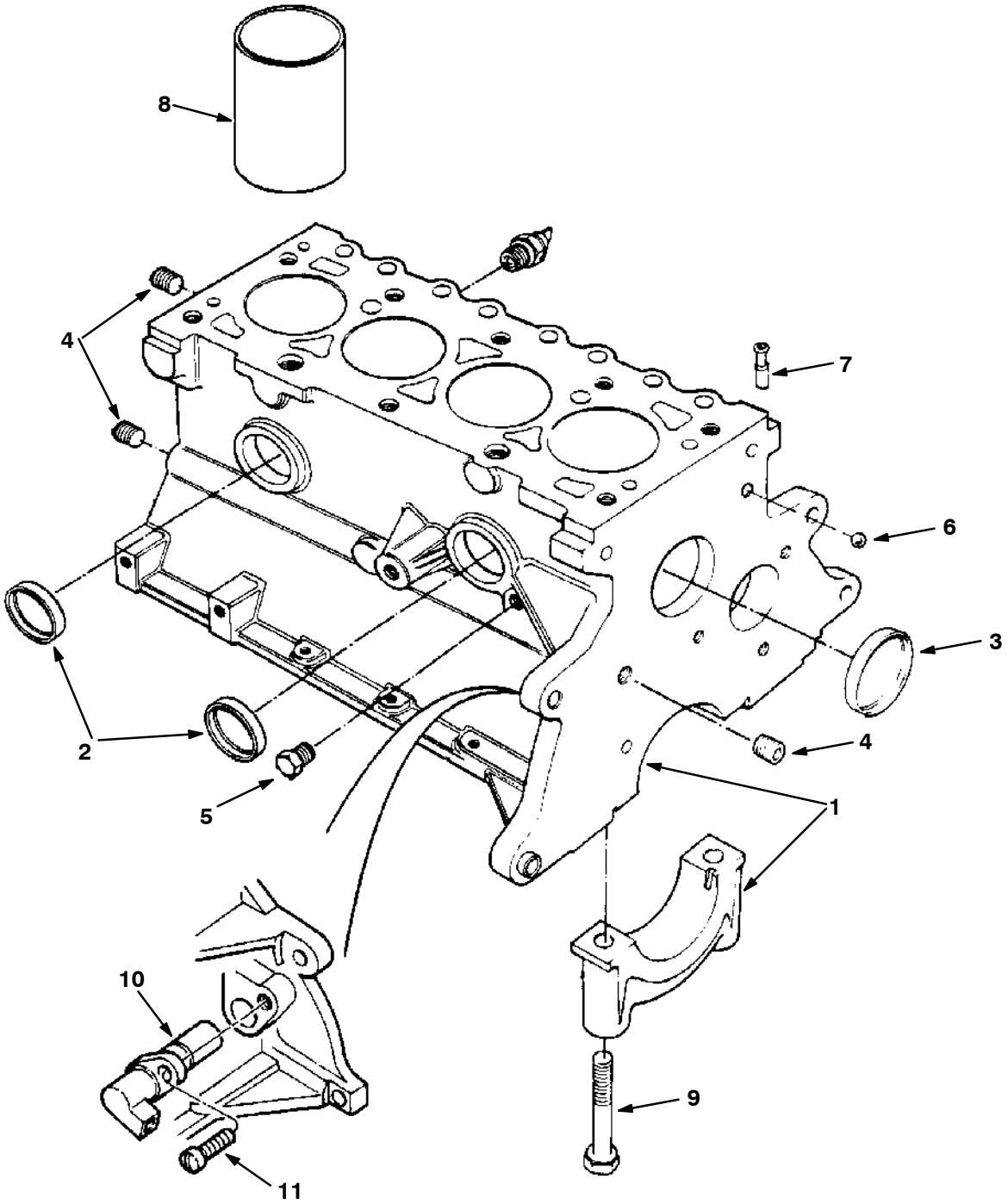

07944-05496

Fig. 2 - Cylinder Block Group

	Ref.	Tennant Part No.	Ford Part Number		Description	Qty.
∇	1	41985	89BM-6011-BA	1	Block, Cylinder, With Crank, Pistons, Rings, etc.	1
▲		41986	89BM-6010-EA	1	Block, Cylinder	1
∇	1	61501	93BM-6012-AAC	2	Long Block, Cylinder, With Crank, Pistons, Rings, etc.	1
▲∇		61500	93BM-6011-AA	2	Short Block, Cylinder	1
▲▲		61499	93BM-6010-AA	2	Block, Cylinder	1
	2	37313	DORY-6026-A		Plug	2
	3	36267	D8RZ-6026-A		Plug	1
	4	36268	F1ZZ-6026-A		Plug, 1/4 NPT	3
	5	36272	353055-S7		Plug, 1/4 NPT	1
	6	36273	E890100-S		Plug, Ball, Oil Gallery	1
	7	36274	D8RZ-6767-A		Adapter	1
	8	41987	89BM-6055-AA		Liner, Cylinder	-
	9	36276	D1FZ-6345-A		Bolt, Main Bearing Cap	6
	10	36277	89BF-6C315-AB		Sensor, 90 degree (older style)	1
	11	36278	E802666-S72		Screw, M6 x 14	1

1 Ford Engine Serial Number (000000-001158)

2 Ford Engine Serial Number (001159-)

10 374632 F5RZ-6C315-A Sensor, 45 degree (newer style).....Qty 1

Fig. 3 - Camshaft and Valve Control Group

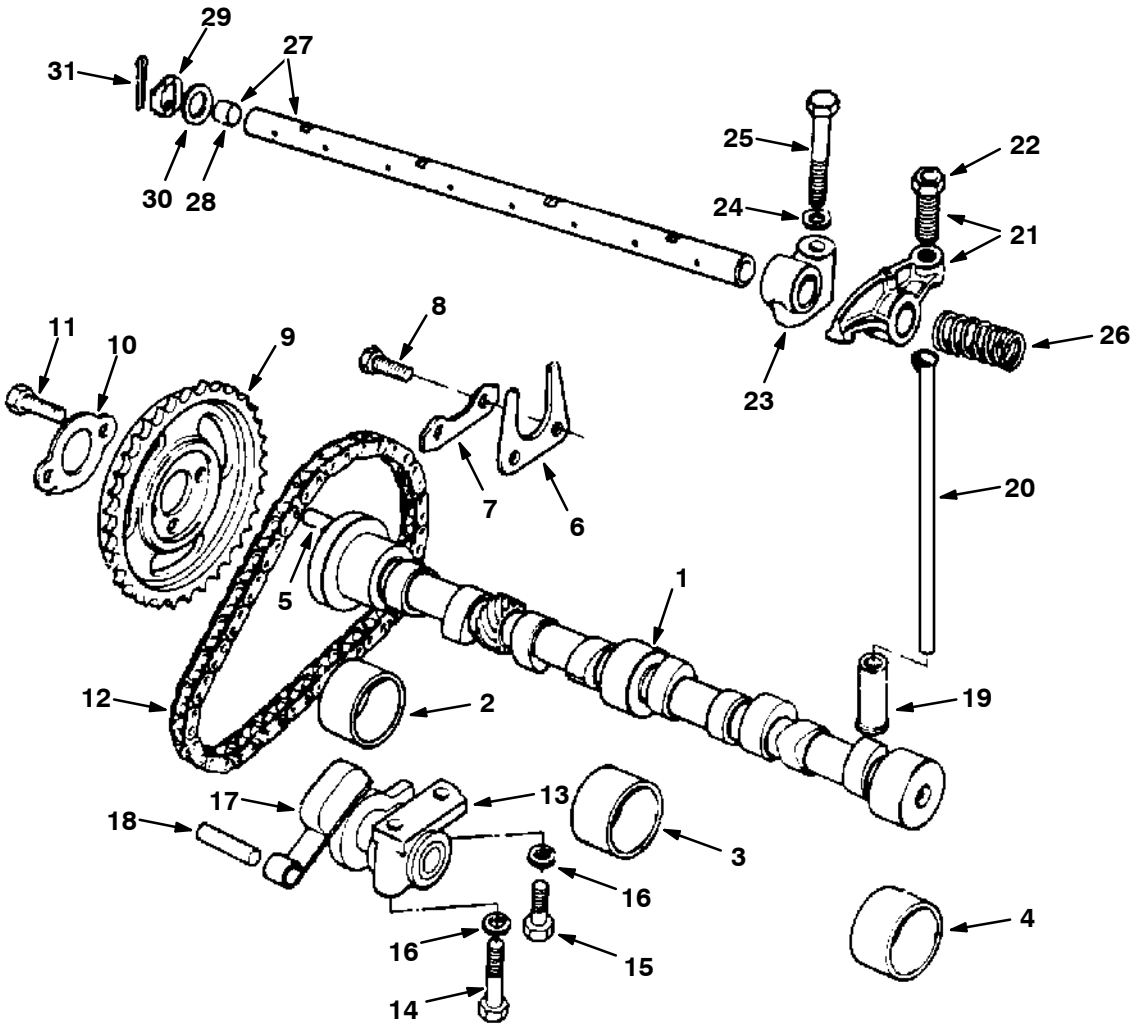

07945-04704

Fig. 3 - Camshaft and Valve Control Group

388463 Bearing Set, cam 1

	Ref.	Tennant Part No.	Ford Part Number	Description	Qty.
	1	41988	89BM-6251-AA	Camshaft	1
▲	2	37316	DORY-6261-A	Bearing, Std ID - Std OD	-
	~~2~~	~~37317~~	~~DORY-6261-B~~	~~Bearing, Std ID + 0.020 OD~~	~~-~~
▲	3	37306	DORY-6262-C	Bearing, Std ID - Std OD	-
	~~3~~	~~38242~~	~~DORY-6262-B~~	~~Bearing, Std ID + 0.020 OD~~	~~-~~
▲	4	37306	DORY-6262-C	Bearing, Std ID - Std OD	-
	~~4~~	~~38242~~	~~DORY-6262-B~~	~~Bearing, Std ID + 0.020 OD~~	~~-~~
	5	61540	E93A-6253-A	Dowel	1
	6	36342	DORY-6269-A	Plate, Thrust	1
	7	36343	DORY-6255-A	Retainer	1
	8	36344	N602166-S2	Bolt, M6 x 16, Tensioner to Block	2
	9	36345	77BM-6256-AA	Sprocket, Camshaft	1
	10	36348	DORY-6258-A	Retainer	1
	11	36349	E602351-S204	Bolt, M8 x 16	2
	12	37307	DORY-6268-A	Chain	1
	13	37337	E43-CP1	Tensioner	1
	14	36372	E600116-S204	Bolt, M6 x 55, Tensioner to Block	1
	15	36344	N602166-S72	Bolt, M6 x 16, Tensioner to Block	1
	16	36373	34805-S8	Washer, 1/4 Lock	2
	17	36374	77BM-6K255-AC	Arm, Tensioner	1
	18	37694	E43-CP1	Pin	1
	19	36375	89BM-6500-AA	Tappet, Std	8
	20	36381	89BM-6565-AA	Rod, Valve Push	8
	21	36382	89BM-6529-AB	Arm, Valve Rocker, Right, With Screw	4
∇	21	36383	89BM-6K528-AB	Arm, Valve Rocker, Left, With Screw	4
▲	22	37693	DORY-6549-B	Screw	8
	23	36384	77BM-6531-BB	Support, Rocker Arm Shaft	4
	24	36389	E630031-S101	Washer, B10 x 20 x 2.5	4
	25	36390	E800509-S72	Bolt, Rocker Support	4
	26	36402	DORY-6587-A	Spring, Locating	3
∇	27	36405	89BM-6A557-AA	Shaft Assembly, Rocker Arm	1
▲	28	36406	357966-S	Plug, Rocker Arm Shaft, 11 mm	2
	29	36407	77BM-6598-AB	Washer, Spring	2
	30	36408	DORY-6590-A	Washer, Flat	2
	31	36409	72025-S7	Pin, Cotter, 2.3 mm	2

Fig. 4 - Crankshaft and Piston Group

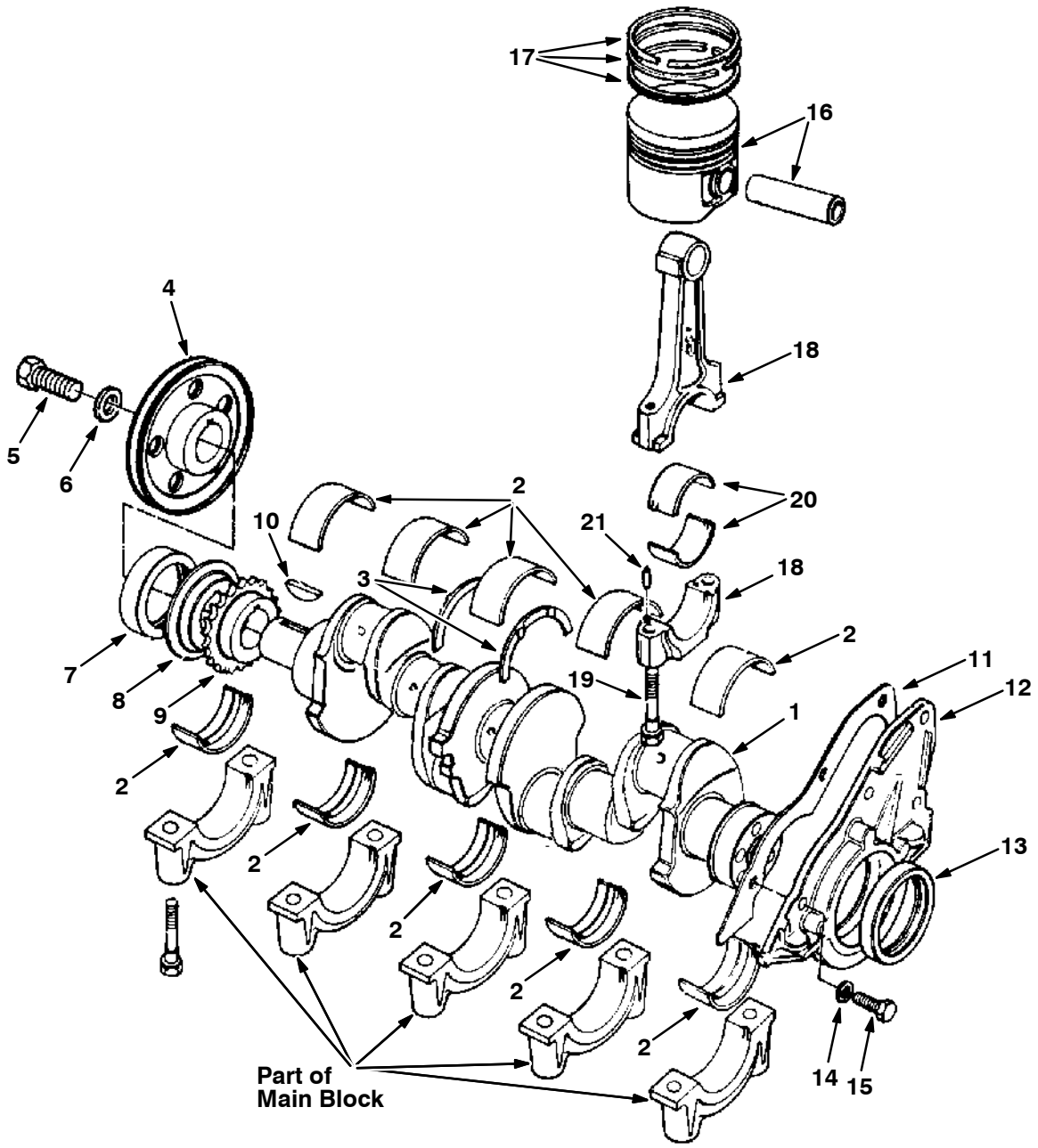

07946-10191

Fig. 4 - Crankshaft and Piston Group

Ref.	Tennant Part No.	Ford Part Number		Description	Qty.
1	41989	89BM-6303-CA	[1]	Crankshaft Assembly	1
1	36322	89BM-6303-DA	[2]	Crankshaft Assembly	1

[1] Ford Engine Serial Number (000000-001158)

[2] Ford Engine Serial Number (001159-)

Ref.	Tennant Part No.	Ford Part Number	Description	Qty.
2	36410	89BM-6333-AA	Main Bearing, Crankshaft, Upper Std OD, Std ID	-
2	36411	89BM-6333-BA	Main Bearing, Crankshaft, Upper Std OD, 0.005 US ID	-
2	36412	89BM-6333-CA	Main Bearing, Crankshaft, Upper Std OD, 0.010 US ID	-
2	36413	89BM-6333-DA	Main Bearing, Crankshaft, Upper 0.015 OS OD, Std ID	-
2	36414	89BM-6333-EA	Main Bearing, Crankshaft, Upper Std OD, 0.020 US ID	-
2	36415	89BM-6333-FA	Main Bearing, Crankshaft, Upper Std OD, 0.030 US ID	-
2	36416	89BM-6333-GA	Main Bearing, Crankshaft, Upper 0.015 OS OD, 0.010 US ID	-
2	36418	89BM-6333-HA	Main Bearing, Crankshaft, Upper 0.015 OS OD, 0.020 US ID	-
2	61545	89BM-6331-AA	Main Bearing, Crankshaft, Lower Std OD, Std ID	-
2	61546	89BM-6331-BA	Main Bearing, Crankshaft, Lower Std OD, 0.005 US ID	-
2	61547	89BM-6331-CA	Main Bearing, Crankshaft, Lower Std OD, 0.010 US ID	-
2	61548	89BM-6331-DA	Main Bearing, Crankshaft, Lower 0.015 OS OD, Std ID	-
2	61549	89BM-6331-EA	Main Bearing, Crankshaft, Lower Std OD, 0.020 US ID	-
2	61550	89BM-6331-FA	Main Bearing, Crankshaft, Lower Std OD, 0.030 US ID	-
2	61551	89BM-6331-GA	Main Bearing, Crankshaft, Lower 0.015 OS OD, 0.010 US ID	-
2	61552	89BM-6331-HA	Main Bearing, Crankshaft, Lower 0.015 OS OD, 0.020 US ID	-
3	36419	89BM-6A341-AA	Washer, Main Bearing Thrust, Std	2
3	36421	89BM-6A341-BA	Washer, Main Bearing Thrust, 0.015 OS	-
4	36422	89BM-6312-AA	Pulley, Crankshaft, 1 Groove	1
5	36423	89BM-6K340-AA	Bolt, Pulley to Crankshaft, M12 x 32	1
6	07707	E830135-S76	Washer, Pulley to Crankshaft, B12	1
7	36257	83BM-6700-A4A	Seal, Front Cover	1
388476 8	~~36424~~	D8RZ-6310-A	Slinger, Oil	1
9	37321	DORY-6306-A	Sprocket	1
10	37312	DORY-6B316-A	Key, Woodruff	1
11	36259	89BM-6344-BA	Gasket, Rear Retainer	1
12	36430	86BM-6K318-AA	Retainer Assembly, Rear	1
13	36262	86HM-6701-AIA	Seal, Crankshaft Rear	1
14	36431	E630173-S71M	Washer, B8 Lock	4
15	37181	E602187-S82	Bolt, M8 x 20	4
16	41990	89BM-6102-AA	Piston, Pin and Ring Assembly, Std	4
16	41991	89BM-6102-BA	Piston, Pin and Ring Assembly, 0.020 OS	-
16	41992	89BM-6102-CA	Piston, Pin and Ring Assembly, 0.040 OS	-
17	61524	89BM-6148-AA	Ring Set, Piston, Std	4
17	61525	89BM-6148-BA	Ring Set, Piston, 0.020 OS	-
17	61526	89BM-6148-CA	Ring Set, Piston, 0.040 OS	-
18	61527	89BM-6200-AD	Rod Assembly, Connecting	4
19	36454	89BM-6214-DB	Bolt, Connecting Rod	8
20	36463	89BM-6211-AA	Bearing, Connecting Rod, Std	8
20	36467	89BM-6211-BA	Bearing, Connecting Rod, 0.001 US	-
20	36469	89BM-6211-CA	Bearing, Connecting Rod, 0.010 US	-
20	36483	89BM-6211-DA	Bearing, Connecting Rod, 0.020 US	-
20	36493	89BM-6211-EA	Bearing, Connecting Rod, 0.030 US	-
21	36590	116336-ES100	Dowel Pin, Connecting Rod	8

Fig. 5 - Oil Pump and Oil Pan Group

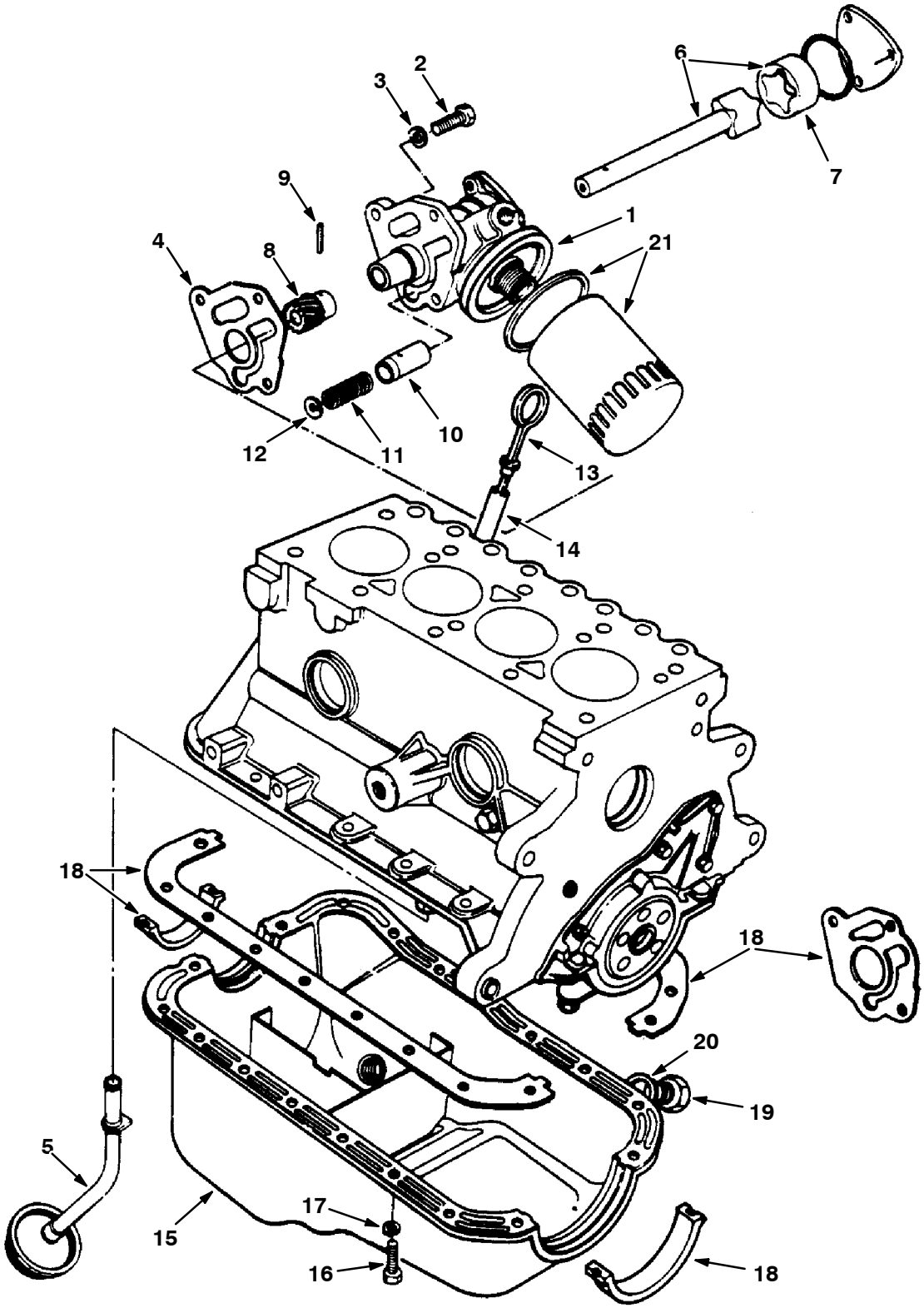

07947-04706

Fig. 5 - Oil Pump and Oil Pan Group

Ref.	Tennant Part No.	Ford Part Number	Description	Qty.
1	07710	D8RZ-6600-A	Pump, Oil	1
2	36748	E800519-S72	Bolt	3
3	36431	E630173-S71M	Washer, B8 Lock	3
4	36764	89BM-6659-AA	Gasket, Oil Pump to Block	1
5	36765	86BM-6617-AA	Tube Assembly, Oil Pickup	1
6	10075	D1FZ-6608-B	Rotor and Shaft	1
7	37403	116682-ES	Seal, Cover Plate	1
8	36780	DORY-6652-A	Gear	1
9	36867	72432-S	Pin, Drive Gear	1
10	36881	DORY-6674-A	Plunger	1
11	36904	DORY-6670-A	Spring	1
12	36923	DORY-6666-A	Plug	1
13	36924	92BM-6750-AA	Indicator, Oil Level	1
14	37053	89BM-6784-AA	Tube, Oil Level Indicator	1
15	37098	86BM-6675-AA	Oil Pan and Plug	1
16	37099	E602165-S72	Bolt, M6 x 14, Oil Pan	18
17	36373	34805-S8	Washer, 1/4 Lock	18
18	07711	A76SX-6013-AA	[1] Kit, Oil Pan Gasket	1
18	10806	A850X-6013-AA	[2] Kit, Oil Pan Gasket	1
19	37127	E9DZ-6730-B	Plug, Oil Drain	1
20	37157	E9DZ-6734-B	Gasket, Oil Drain Plug	1
21	19205		Filter, Engine Oil	1

[1] Ford Engine Serial Number (000000-001158)

[2] Ford Engine Serial Number (001159-)

Fig. 6 - Manifold Group

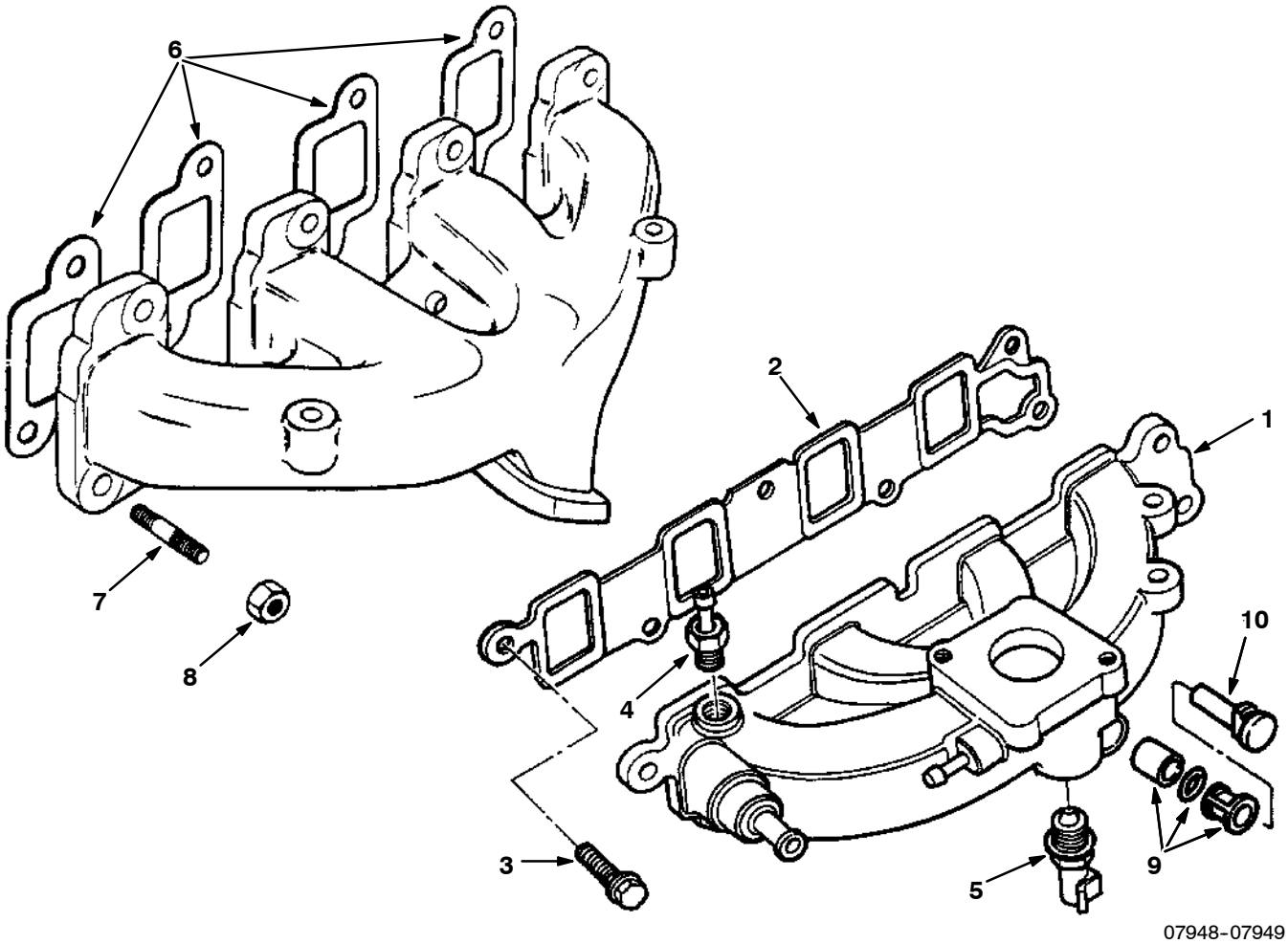

Ref.	Tennant Part No.	Ford Part Number		Description	Qty.
1	37194	89BF-9424-AD		Manifold, Intake	1
2	37195	89BM-9441-AB		Gasket, Intake Manifold	1
3	37196	E800157-S72		Bolt, M8 x 25	6
4	37198	77BF-9K442-AA		Adapter, Vacuum	1
5	37199	E1AZ-12A648-A	1	Sensor, Water Temperature	1
5	84989	F57Z-12A648-AA	2	Sensor, Water Temperature	1
6	61556	89BM-9448-BA		Gasket, Exhaust Manifold	4
7	30327			Stud	8
8	08165			Nut, Hx Stover M8 x 1.25	8
9	21784	87AB-2A411-BA		Manifld Insert	1
10	21785	87AB-9H490-AA		Plug	1

1 Tennant Serial Number (000000-004097)

2 Tennant Serial Number (004098-)

Fig. 7 - Front Cover Assembly Group

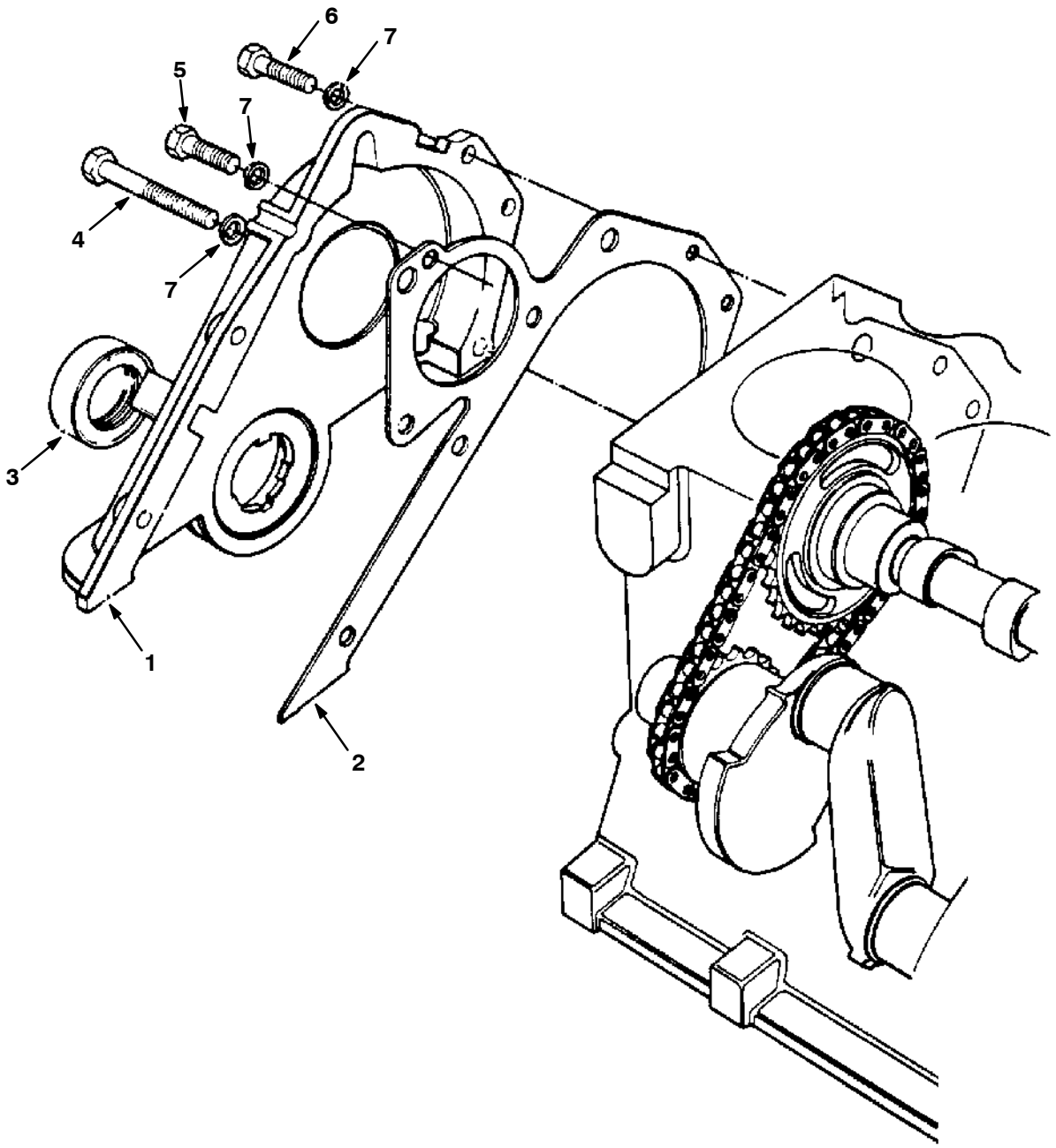

06075-04708

	Ref.	Tennant Part No.	Ford Part Number	Description	Qty.
▽	1	36332	89BM-6019-AA	Cover and Seal Assembly, Cylinder Front	1
▲	2	52484	89BM-6020-AA	Gasket, Front Cover	1
▲	3	36257	83BM-6700-A4A	Seal, Front Cover	1
	4	36337	E800518-S72	Bolt, M6 x 45, Front Cover to Block	1
	5	39047	E600113-S72	Bolt, M6 x 40, Front Cover to Block	3
	6	36338	E800512-S72	Bolt, M6 x 18, Front Cover to Block	4
	7	36339	EB32108S71M	Washer, Lock, M6, Front Cover and W/P to Block	8

Fig. 8 - Water Pump Group

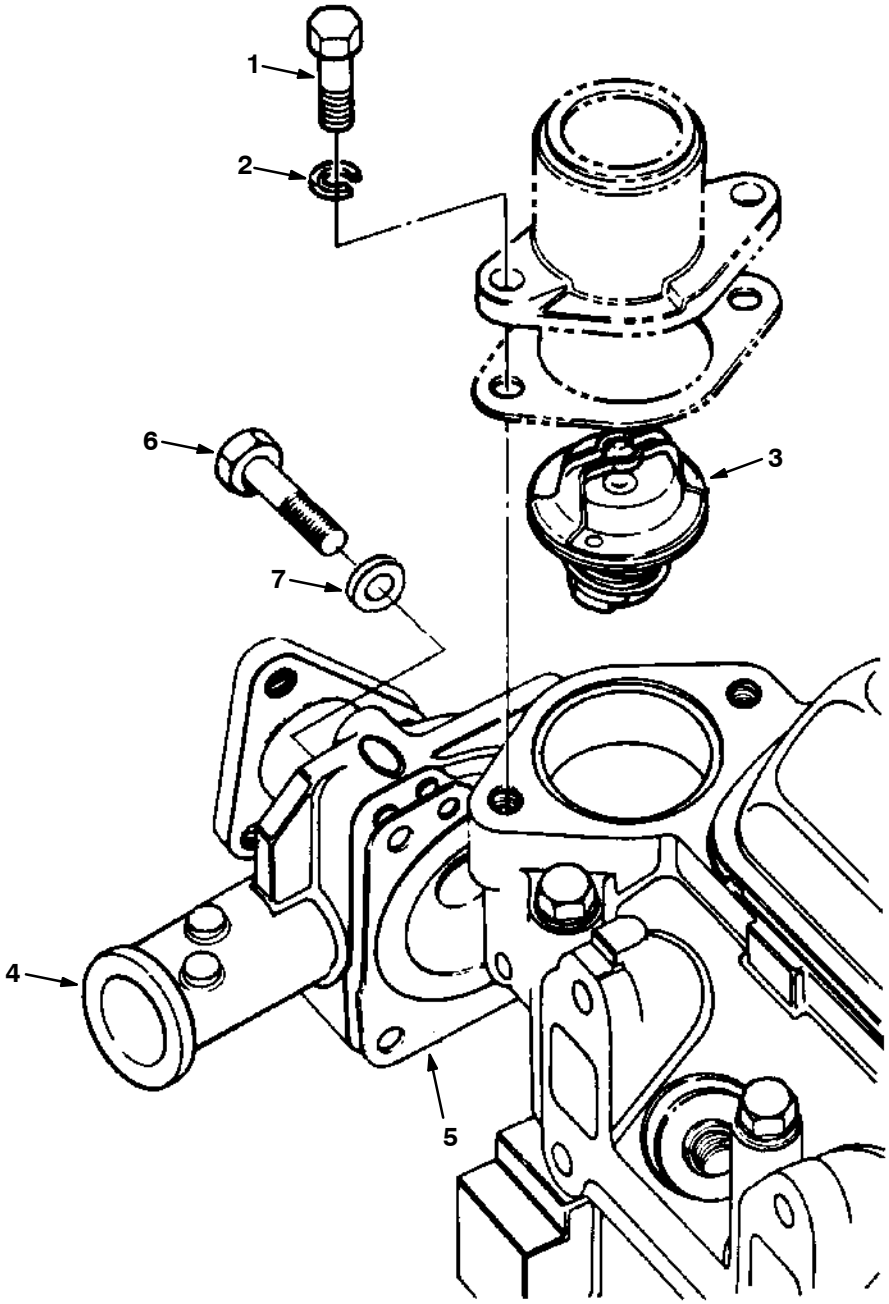

07951-04709

Ref.	Tennant Part No.	Ford Part Number	Description	Qty.
1	37181	E602187-S72	Bolt, M8 x 20	2
2	36431	E630173-S71M	Washer, B8 Lock	2
3	37327	RT-351	Thermostat	1
4	26431	92BX-8591-AA	Water Pump	1
5	37189	89BM-8507-AA	Gasket, Water Pump	1
6	37193	E600113-S72	Bolt, M6 x 40, Front Cover and W/P to Block	3
7	36339	E832108-S71M	Washer, M6 Lock	3

Fig. 9 - Distributorless Ignition Group

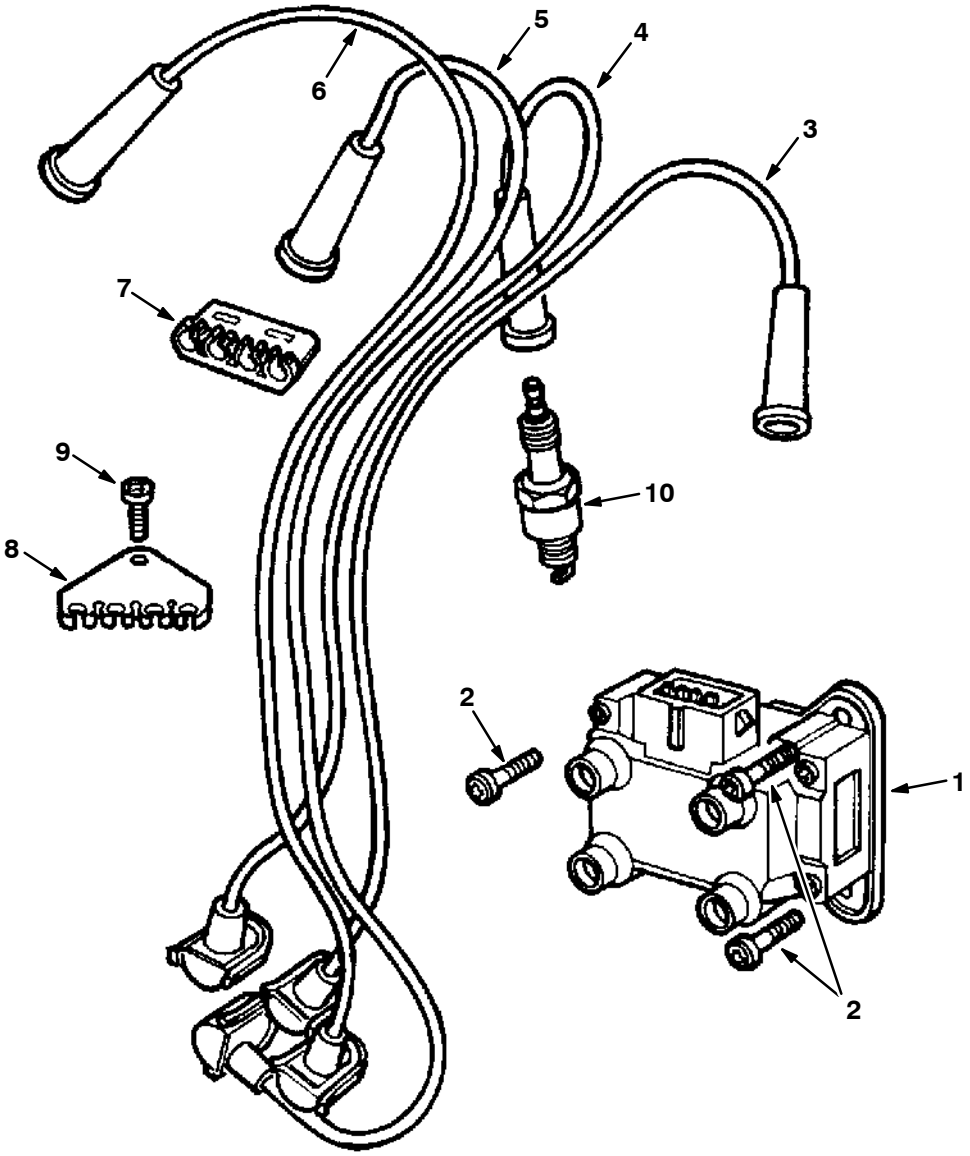

07952-05507

Ref.	Tennant Part No.	Ford Part Number	Description	Qty.
1	39025	89BF-12024-A1B	Coil and Bracket Assembly, Ignition	1
2	39026	E804335-S201	Screw, M8 x 14	3
3	39038	89BF-12286-AD	Wire, Spark Plug, No. 1	1
4	39040	89BF-12283-AD	Wire, Spark Plug, No. 2	1
5	39041	89BF-12284-AD	Wire, Spark Plug, No. 3	1
6	39042	89BF-12287-AC	Wire, Spark Plug, No. 4	1
7	39043	E865648-S	Separator, Ignition Wire	1
8	39044	89BF-12297-AA	Separator, Ignition Wire	1
9	39045	E802166-S76	Screw, M4 x 10	1
10	39046	87YF-12405-AB	Spark Plug	4

Fig. 10 - Gaskets Group

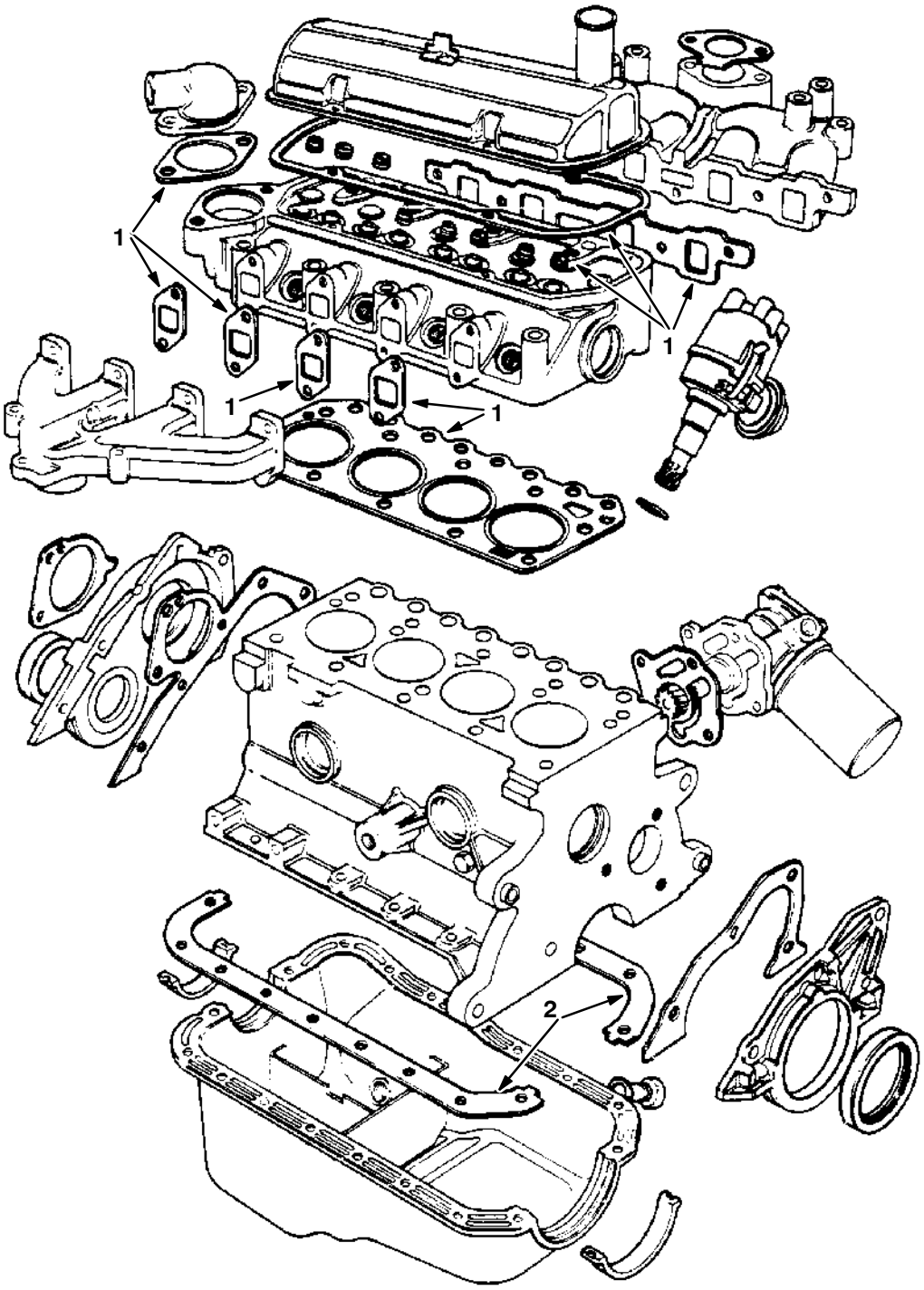

07953-04711

	Ref.	Tennant Part No.	Ford Part Number	Description	Qty.
∇		41995	88BX-6008-AA	Engine Gasket Kit, Complete	1
▲	1	41996	88BX-6014-AA	Engine Gasket Kit, Upper	1

Fig. 11 - Flywheel Group

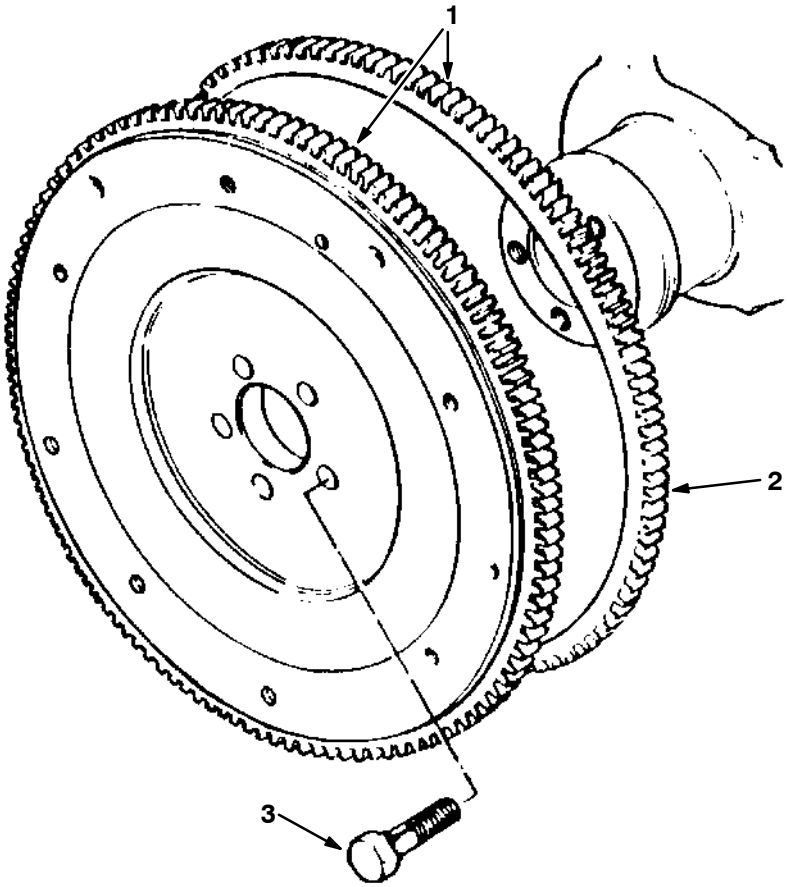

07954-04710

	Ref.	Tennant Part No.	Ford Part Number		Description	Qty.
∇	1	41997	89BM-6375-AA	[1]	Flywheel and Ring Gear Assembly	1
∇	1	36591	89BM-6375-BA	[2]	Flywheel and Ring Gear Assembly	1
▲	2	52488	D8RZ-6384-A		Ring, Gear	1
	3	36630	D2RY-6379-A		Bolt, M10 x 22.5, Flywheel to Crankshaft	5
		36646	D1FZ-6397-B		Dowel	3

[1] Ford Engine Serial Number (000000-001158)

[2] Ford Engine Serial Number (001159-)

SECTION 6

CONTENTS PAGE

Fig. 1 – Cylinder Head, Valves Group 6-2
Fig. 2 – Cylinder Block Group 6-4
Fig. 3 – Camshaft and Valve Control Group 6-6
Fig. 4 – Crankshaft and Piston Group 6-8
Fig. 5 – Oil Pump and Oil Pan Group 6-10
Fig. 6 – Manifold Group 6-12
Fig. 7 – Front Cover Assembly Group 6-13
Fig. 8 – Water Pump Group 6-14
Fig. 9 – Distributorless Ignition Group 6-15
Fig. 10 – Gaskets Group 6-16
Fig. 11 – Flywheel Group 6-17

Fig. 1 - Cylinder Head, Valves Group

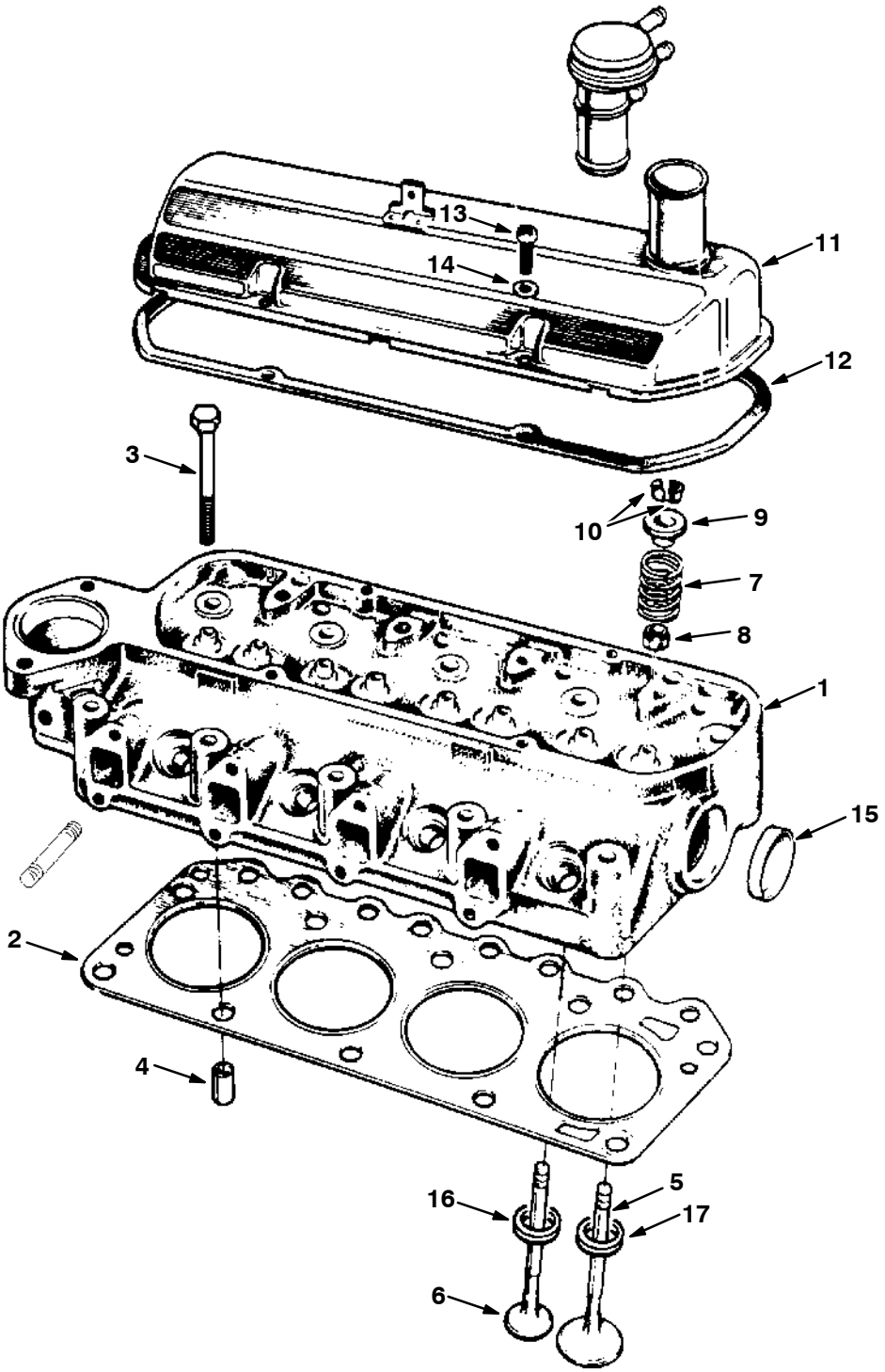

05498-04702

Fig. 1 - Cylinder Head, Valves Group

Ref.	Tennant Part No.	Ford Part Number	Description	Qty.
1	36279	89BM-6049-DD	Head Assembly, Cylinder	1
2	36281	89BM-6051-C2B	Gasket, Cylinder Head	1
3	36297	89BM-6065-DA	Bolt, Cylinder Head	10
4	36298	E840126-S	Dowel, Cylinder Head to Block	2
5	36300	89BM-6507-BA	Valve, Intake, Std	-
6	36307	89BM-6505-CA	Valve, Exhaust, Std	4
7	36315	89BM-6513-AA	Spring, Valve	8
8	61538	88WM-6571-BB	Seal, Valve Stem	8
9	36318	89BM-6A536-AA	Retainer	8
10	36319	88WM-6518-AA	Lock, Valve Spring	16
11	36321	89BM-6582-AA	Cover, Rocker Arm	1
12	07705	77BM-6584-CA	Gasket, Rocker Arm Cover	1
13	36324	E800516-S72	Screw, Rocker Cover to Head	4
14	36325	E630024-S201	Washer, Flat, 6 mm	4
15	37313	DORY-6026-A	Plug	1
16	36330	89BM-6057-A2E	Insert, Exhaust Valve Seat	4
17	36331	89BM-6056-A1G	Insert, Intake Valve Seat	4

Fig. 2 – Cylinder Block Group

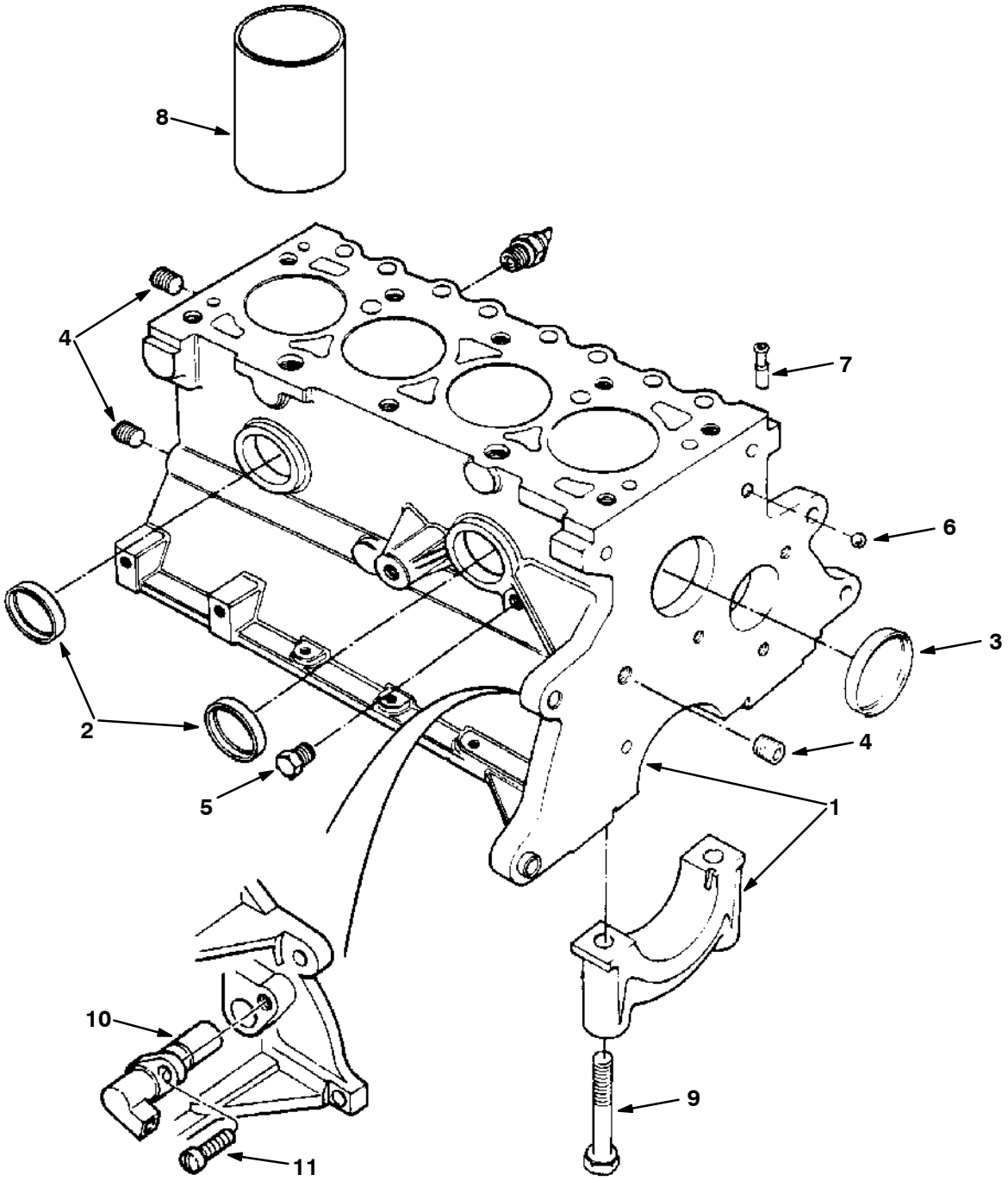

05497-05496

Fig. 2 - Cylinder Block Group

	Ref.	Tennant Part No.	Ford Part Number	Description	Qty.
▽	1	36264	89BM-6011-DA	Block, Cylinder, With Crank, Piston, Rings, etc.	1
▲		36263	89BM-6010-FA	Block, Cylinder	1
	2	37313	DORY-6026-A	Plug	2
	3	36267	D8RZ-6026-A	Plug	1
	4	36268	F1ZZ-6026-A	Plug, 1/4 NPT	3
	5	36272	353055-S7	Plug, 1/4 NPT	1
	6	36273	E890100-S	Plug, Ball, Oil Gallery	1
	7	36274	D8RZ-6767-A	Adapter	1
	8	36275	89BM-6055-BA	Liner, Cylinder	-
	9	36276	D1FZ-6345-A	Bolt, Main Bearing Cap	10
	10	36277	89BF-6C315-AB	Sensor, 90 degree (older style)	1
	11	36278	E802666-S72	Screw, M6 x 14	1

10 374632 F5RZ-6C315-A Sensor, 45 degree (newer style).....Qty 1

Fig. 3 - Camshaft and Valve Control Group

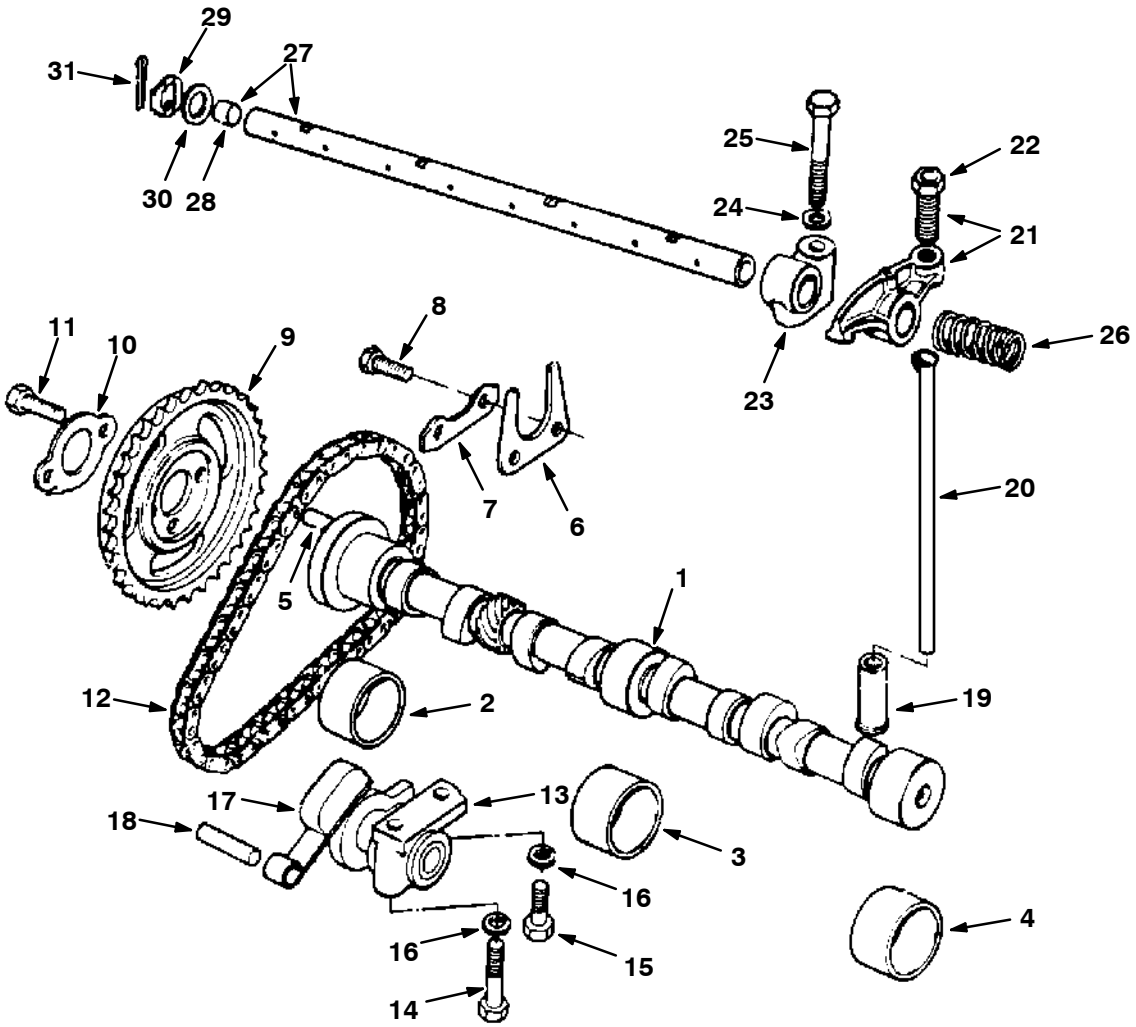

05500-04707

Fig. 3 - Camshaft and Valve Control Group

388463 Bearing Set, cam 1

	Ref.	Tennant Part No.	Ford Part Number	Description	Qty.
	1	36340	89BM-6251-BA	Camshaft	1
▲	2	37316	DORY-6261-A	Bearing, Std ID - Std OD	-
	~~2~~	~~37317~~	~~DORY-6261-B~~	~~Bearing, Std ID + 0.020 OD~~	~~-~~
▲	3	37306	DORY-6262-C	Bearing, Std ID - Std OD	-
	~~3~~	~~38242~~	~~DORY-6262-B~~	~~Bearing, Std ID + 0.020 OD~~	~~-~~
▲	4	37306	DORY-6262-C	Bearing, Std ID - Std OD	-
	~~4~~	~~38242~~	~~DORY-6262-B~~	~~Bearing, Std ID + 0.020 OD~~	~~-~~
	5	61540	E93A-6253-A	Dowel	1
	6	36342	DORY-6269-A	Plate, Thrust	1
	7	36343	DORY-6255-A	Retainer	1
	8	36344	N602166-S2	Bolt, M6 x 16, Tensioner to Block	2
	9	36345	77BM-6256-AA	Sprocket, Camshaft	1
	10	36348	DORY-6258-A	Retainer	1
	11	36349	E602351-S72	Bolt, M8 x 16	2
	12	37307	DORY-6268-A	Chain	1
	13	37337	D1FZ-6284-A	Tensioner	1
	14	36372	E600116-S204	Bolt, M6 x 55, Tensioner to Block	1
	15	36344	EN2166-S72	Bolt, M6 x 16, Tensioner to Block	1
	16	36373	34805-S8	Washer, 1/4 Lock	2
	17	36374	77BM-6K255-AC	Arm, Tensioner	1
	18	37694	E43-CPI	Pin	1
	19	36375	89BM-6500-AA	Tappet, Std	8
	20	36381	89BM-6565-AA	Rod, Valve Push	8
	21	36382	89BM-6529-AB	Arm, Valve Rocker, Right, With Screw	4
∇	21	36383	89BM-6K528-AB	Arm, Valve Rocker, Left, With Screw	4
▲	22	37693	DORY-6549-B	Screw	8
	23	36384	77BM-6531-BB	Support, Rocker Arm Shaft	4
	24	36389	E630031-S101	Washer, B10 x 20 x 2.5	4
	25	36390	E800509-S72	Bolt, Rocker Support	4
	26	36402	DORY-6587-A	Spring, Locating	3
∇	27	36405	88BM-6A557-AA	Shaft Assembly, Rocker Arm	1
▲	28	36406	357966-S	Plug, Rocker Arm Shaft, 11 mm	2
	29	36407	77BM-6598-AB	Washer, Spring	2
	30	36408	DORY-6590-A	Washer, Flat	2
	31	36409	72025-S7	Pin, Cotter, 2.3 mm	2

Fig. 4 – Crankshaft and Piston Group

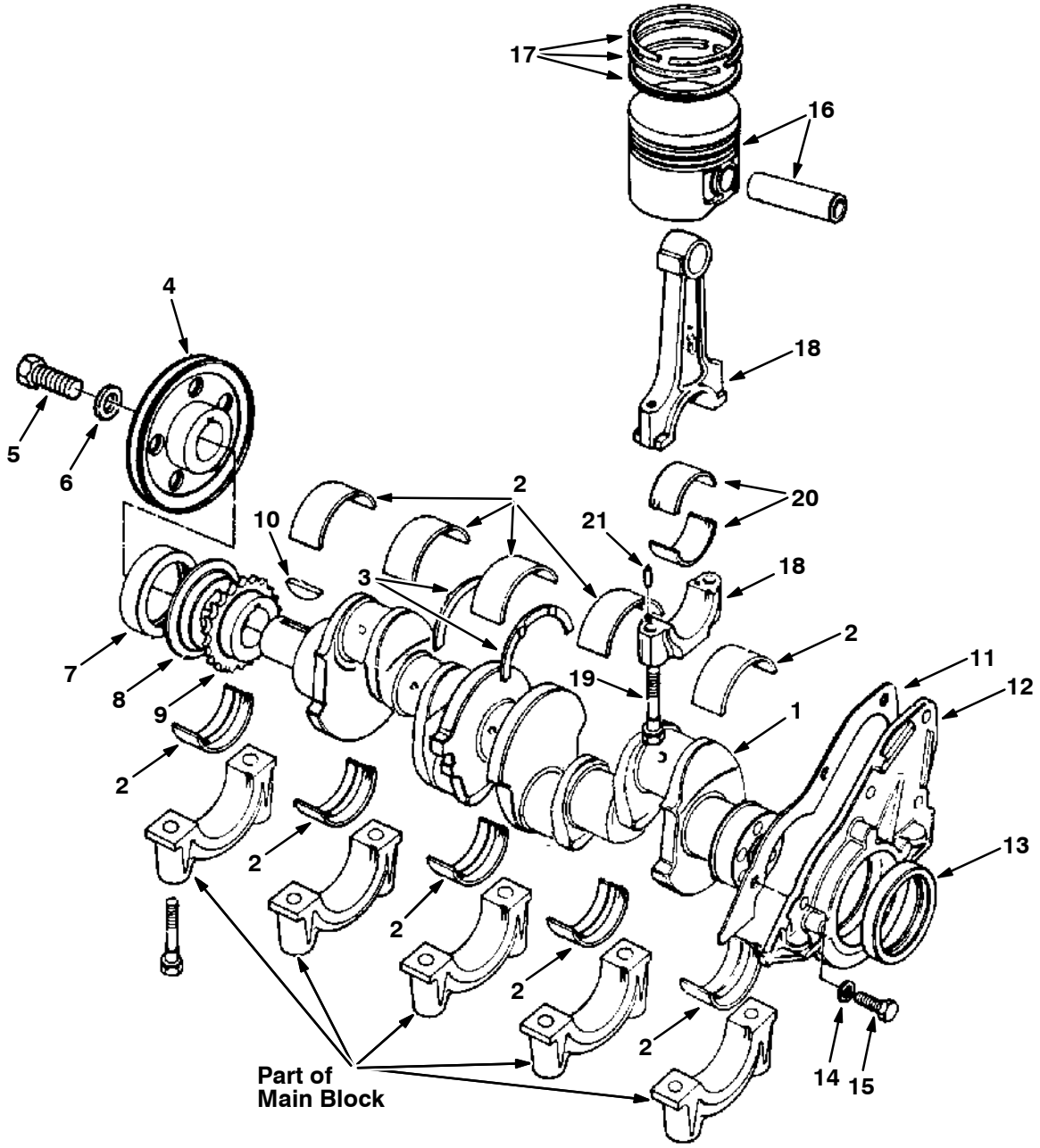

05501-10191

Fig. 4 - Crankshaft and Piston Group

Ref.	Tennant Part No.	Ford Part Number	Description	Qty.
1	36322	89BM-6303-DA	Crankshaft Assembly	1
2	36410	89BM-6333-AA	Main Bearing, Crankshaft, Upper Std OD, Std ID	-
2	36411	89BM-6333-BA	Main Bearing, Crankshaft, Upper Std OD, 0.005 US ID	-
2	36412	89BM-6333-CA	Main Bearing, Crankshaft, Upper Std OD, 0.010 US ID	-
2	36413	89BM-6333-DA	Main Bearing, Crankshaft, Upper 0.015OS OD, Std ID	-
2	36414	89BM-6333-EA	Main Bearing, Crankshaft, UpperStd OD, 0.020 US ID	-
2	36415	89BM-6333-FA	Main Bearing, Crankshaft, Upper Std OD, 0.030 US ID	-
2	36416	89BM-6333-GA	Main Bearing, Crankshaft, Upper 0.015 OS OD, 0.010 US ID	-
2	36418	89BM-6333-HA	Main Bearing, Crankshaft, Upper 0.015 OS OD, 0.020 US ID	-
2	61545	89BM-6331-AA	Main Bearing, Crankshaft, Lower Std OD, Std ID	-
2	61546	89BM-6331-BA	Main Bearing, Crankshaft, Lower Std OD, 0.005 US ID	-
2	61547	89BM-6331-CA	Main Bearing, Crankshaft, Lower Std OD, 0.010 US ID	-
2	61548	89BM-6331-DA	Main Bearing, Crankshaft, Lower 0.015 OS OD, Std ID	-
2	61549	89BM-6331-EA	Main Bearing, Crankshaft, Lower Std OD, 0.020 US ID	-
2	61550	89BM-6331-FA	Main Bearing, Crankshaft, Lower Std OD, 0.030 US ID	-
2	61551	89BM-6331-GA	Main Bearing, Crankshaft, Lower 0.015 OS OD, 0.010 US ID	-
2	61552	89BM-6331-HA	Main Bearing, Crankshaft, Lower 0.015 OS OD, 0.020 US ID	-
3	36419	89BM-6A341-AA	Washer, Main Bearing Thrust, Std	2
3	36421	89BM-6A341-BA	Washer, Main Bearing Thrust, 0.015 OS	-
4	36422	89BM-6312-AA	Pulley, Crankshaft, 1 Groove	1
5	36423	89BM-6K340-AA	Bolt, Pulley to Crankshaft, M12 x 32	1
6	07707	E830135-S76	Washer, Pulley to Crankshaft, B12	1
7	36257	83BM-6700-A4A	Seal, Front Cover	1
8	36424	D8RZ-6310-A	Slinger, Oil	1
9	37321	DORY-6306-A	Sprocket	1
10	37312	DORY-6B316-A	Key, Woodruff	1
11	36259	89BM-6344-BA	Gasket, Rear Retainer	1
12	36430	86BM-6K318-AA	Retainer Assembly, Rear	1
13	36262	86HM-6701-AIA	Seal, Crankshaft Rear	1
14	36431	E630173-S71M	Washer, B8 Lock	4
15	37181	E602187-S82	Bolt, M8 x 20	4
16	36432	89BM-6102-DA	Piston, Pin and Ring Assembly, Std	-
16	36433	89BM-6102-EA	Piston, Pin and Ring Assembly,	-
16	36445	89BM-6102-FA	Piston, Pin and Ring Assembly,	-
17	42361	89BM-6148-DA	Ring Set, Piston, Std	-
17	75809	89BM-6148-EA	Ring Set, Piston, 0.020 OS	-
17	75817	89BM-6148-FA	Ring Set, Piston, 0.040 OS	-
18	61527	89BM-6200-AD	Rod Assembly, Connecting	4
19	36454	89BM-6214-DB	Bolt, Connecting Rod	8
20	36463	89BM-6211-AA	Bearing, Connecting Rod, Std	8
20	36467	89BM-6211-BA	Bearing, Connecting Rod, 0.001 US	-
20	36469	89BM-6211-CA	Bearing, Connecting Rod, 0.010 US	-
20	36483	89BM-6211-DA	Bearing, Connecting Rod, 0.020 US	-
20	36493	89BM-6211-EA	Bearing, Connecting Rod, 0.030 US	-
21	36590	116336-ES100	Dowel Pin, Connecting Rod	8

Fig. 5 – Oil Pump and Oil Pan Group

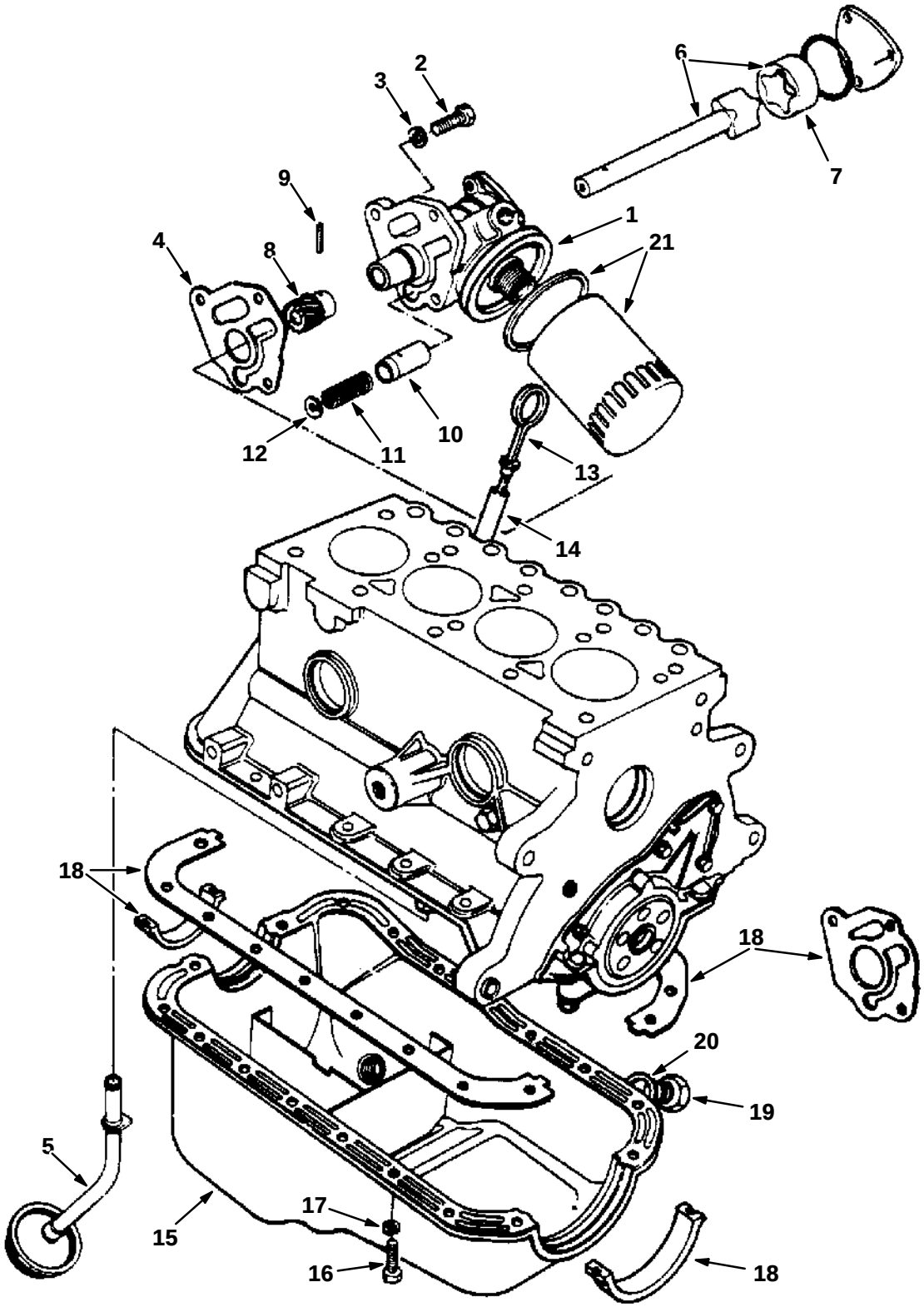

05503-04706

Fig. 5 - Oil Pump and Oil Pan Group

Ref.	Tennant Part No.	Ford Part Number	Description	Qty.
1	07710	D8RZ-6600-A	Pump, Oil	1
2	36748	E800519-S72	Bolt	3
3	36431	E630173-S71M	Washer, B8 Lock	3
4	36764	89BM-6659-AA	Gasket, Oil Pump to Block	1
5	36765	86BM-6617-AA	Tube Assembly, Oil Pickup	1
6	10075	D1FZ-6608-B	Rotor and Shaft	1
7	37403	116682-ES	Seal, Cover Plate	1
8	36780	DORY-6652-A	Gear	1
9	36867	72432-S	Pin, Drive Gear	1
10	36881	DORY-6674-A	Plunger	1
11	36904	DORY-6670-A	Spring	1
12	36923	DORY-6666-A	Plug	1
13	36924	92BM-6750-AA	Indicator, Oil Level	1
14	37053	89BM-6784-AA	Tube, Oil Level Indicator	1
15	37098	86BM-6675-AA	Oil Pan and Plug	1
16	37099	E602165-S72	Bolt, M6 x 14, Oil Pan	18
17	36373	34805-S8	Washer, 1/4 Lock	18
18	10806	A850X-6013-AA	Kit, Oil Pan Gasket	1
19	37127	E9DZ-6730-B	Plug, Oil Drain	1
20	37157	E9DZ-6734-B	Gasket, Oil Drain Plug	1
21	19205		Filter, Engine Oil	1

Fig. 6 - Manifold Group

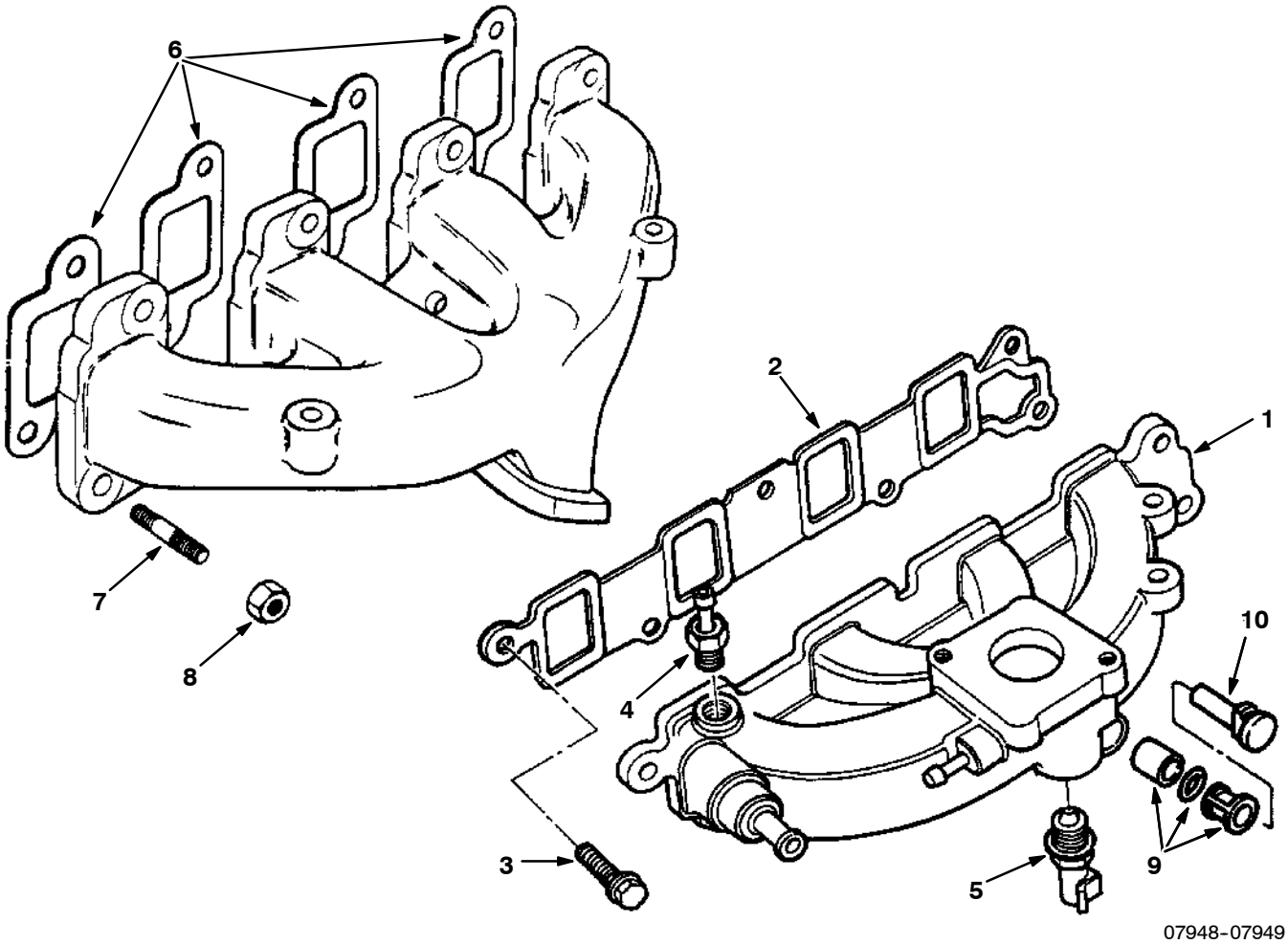

Ref.	Tennant Part No.	Ford Part Number		Description	Qty.
1	37194	89BF-9424-AD		Manifold, Intake	1
2	37195	89BM-9441-AB		Gasket, Intake Manifold	1
3	37196	E800157-S72		Bolt, M8 x 25	6
4	37198	77BF-9K442-AA		Adapter, Vacuum	1
5	37199	E1AZ-12A648-A	1	Sensor, Water Temperature	1
5	84989	F57Z-12A648-AA	2	Sensor, Water Temperature	1
6	61556	89BM-9448-BA		Gasket, Exhaust Manifold	4
7	30327			Stud	8
8	08165			Nut, Hx Stover M8 x 1.25	8
9	21784	87AB-2A411-BA		Manifld Insert	1
10	21785	87AB-9H490-AA		Plug	1

1 Tennant Serial Number (000000-004097)

2 Tennant Serial Number (004098-)

Fig. 7 - Front Cover Assembly Group

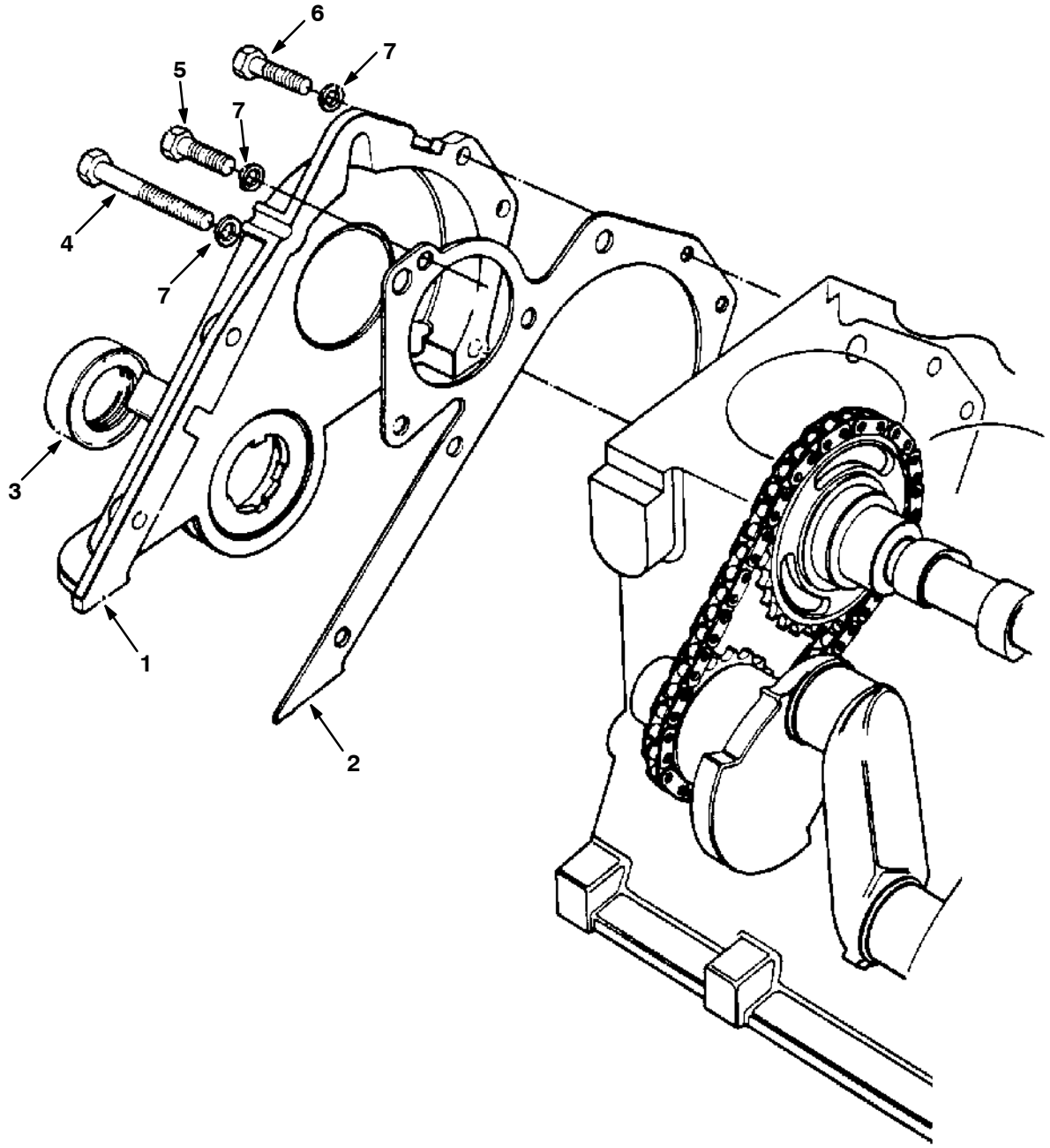

06075-04708

	Ref.	Tennant Part No.	Ford Part Number	Description	Qty.
▽	1	36332	89BM-6019-AA	Cover and Seal Assembly, Cylinder Front	1
▲	2	52484	89BM-6020-AA	Gasket, Front Cover	1
▲	3	36257	83BM-6700-A4A	Seal, Front Cover	1
	4	36337	E800518-S72	Bolt, M6 x 45, Front Cover to Block	1
	5	39047	E600113-S72	Bolt, M6 x 40, Front Cover to Block	3
	6	36338	E800512-S72	Bolt, M6 x 18, Front Cover to Block	4
	7	36339	E832108S71M	Washer, Lock, M6, Front Cover and W/P to Block	8

Fig. 8 - Water Pump Group

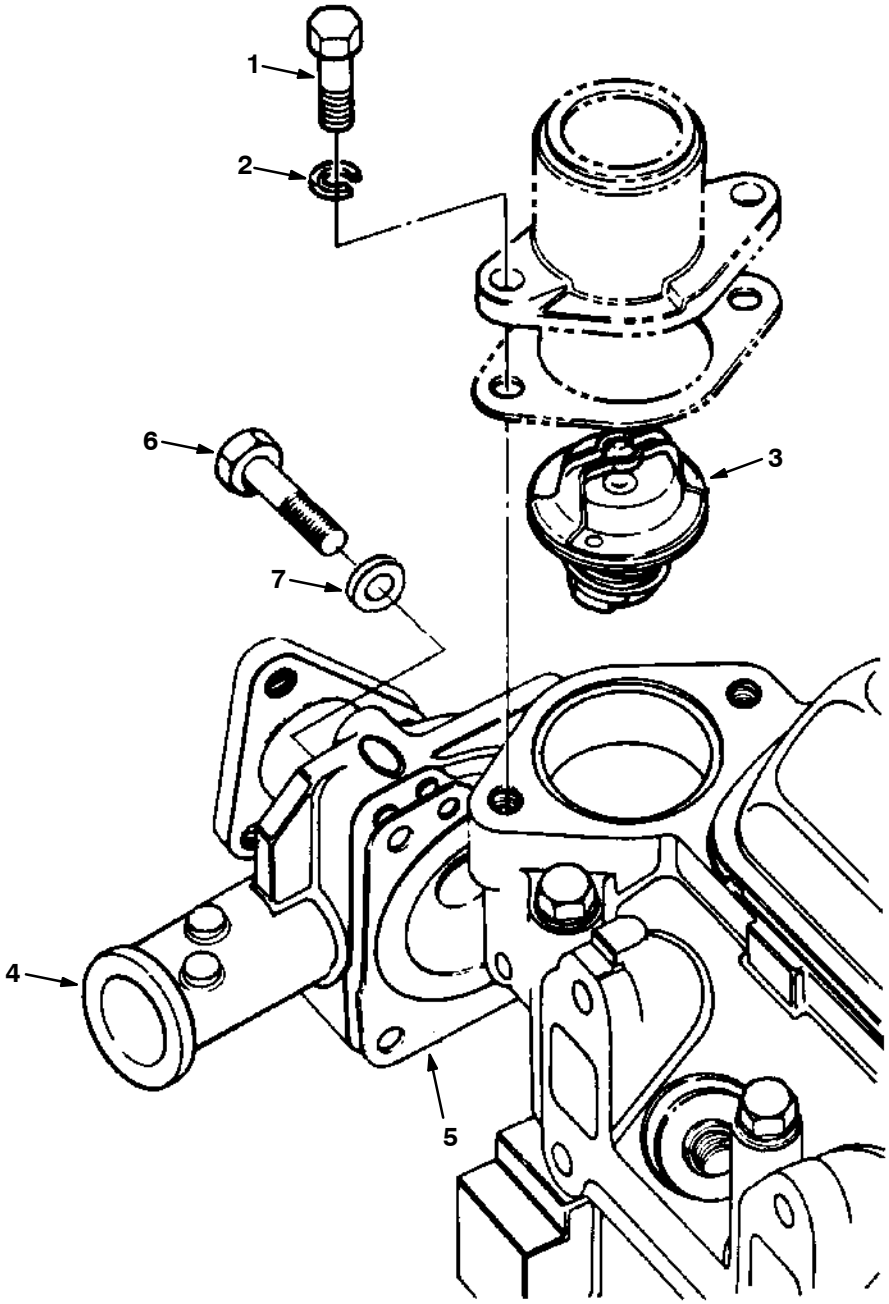

07951-04709

Ref.	Tennant Part No.	Ford Part Number	Description	Qty.
1	37181	E602187-S82	Bolt, M8 x 20	2
2	36431	E630173-S71M	Washer, B8 Lock	2
3	37327	RT-351	Thermostat	1
4	26431	92BX-8591-AA	Water Pump	1
5	37189	89BM-8507-AA	Gasket, Water Pump	1
6	37193	E600113-S72	Bolt, M6 x 40, Front Cover and W/P to Block	3
7	36339	E832108-S71M	Washer, M6 Lock	3

Fig. 9 - Distributorless Ignition Group

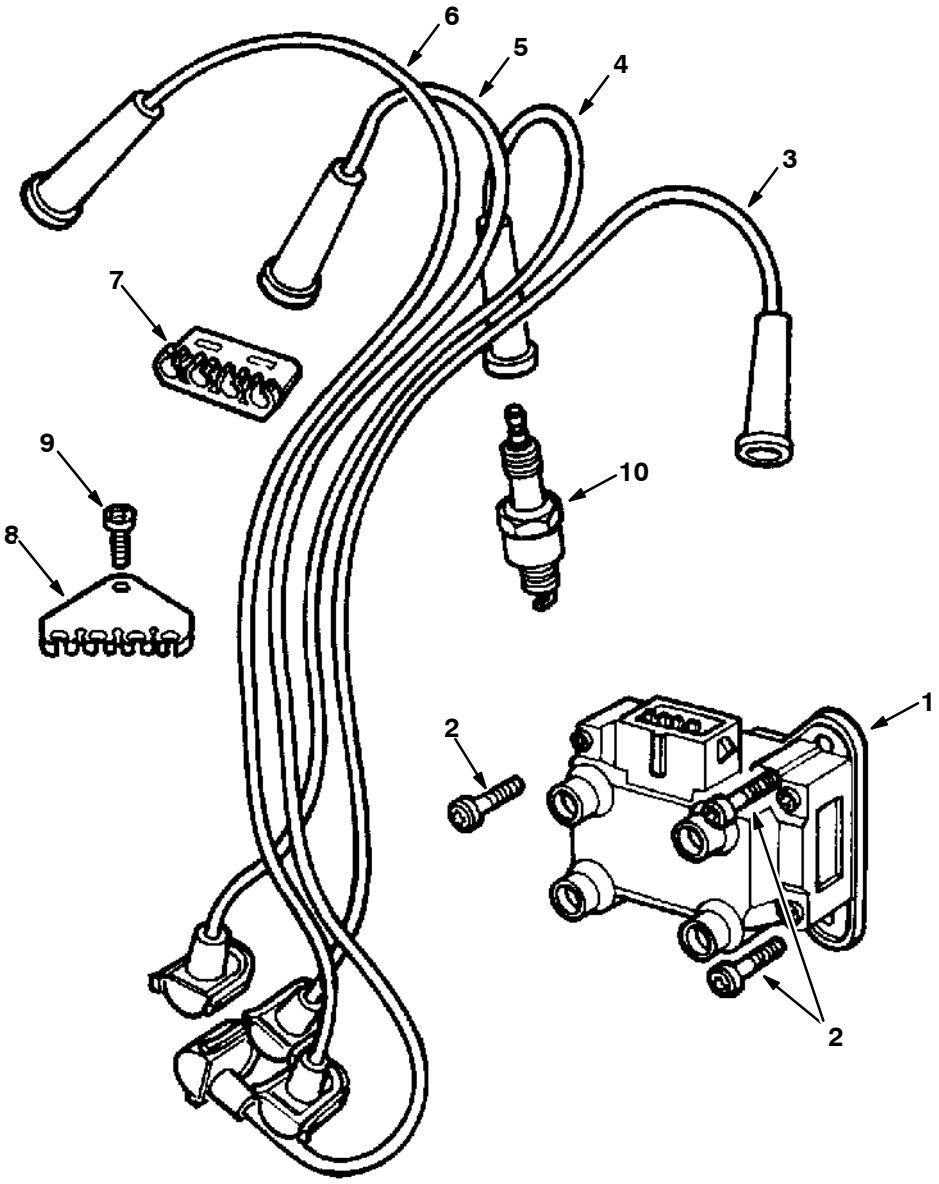

07952-05507

Ref.	Tennant Part No.	Ford Part Number	Description	Qty.
1	39025	89BF-12024-A1B	Coil and Bracket Assembly, Ignition	1
2	39026	E804335-S201	Screw, M8 x 14	3
3	39038	89BF-12286-AD	Wire, Spark Plug, No. 1	1
4	39040	89BF-12283-AD	Wire, Spark Plug, No. 2	1
5	39041	89BF-12284-AD	Wire, Spark Plug, No. 3	1
6	39042	89BF-12287-AC	Wire, Spark Plug, No. 4	1
7	39043	E865648-S	Separator, Ignition Wire	1
8	39044	89BF-12297-AA	Separator, Ignition Wire	1
9	39045	E802166-S76	Screw, M4 x 10	1
10	39046	87YF-12405-AB	Spark Plug	4

Fig. 10 - Gaskets Group

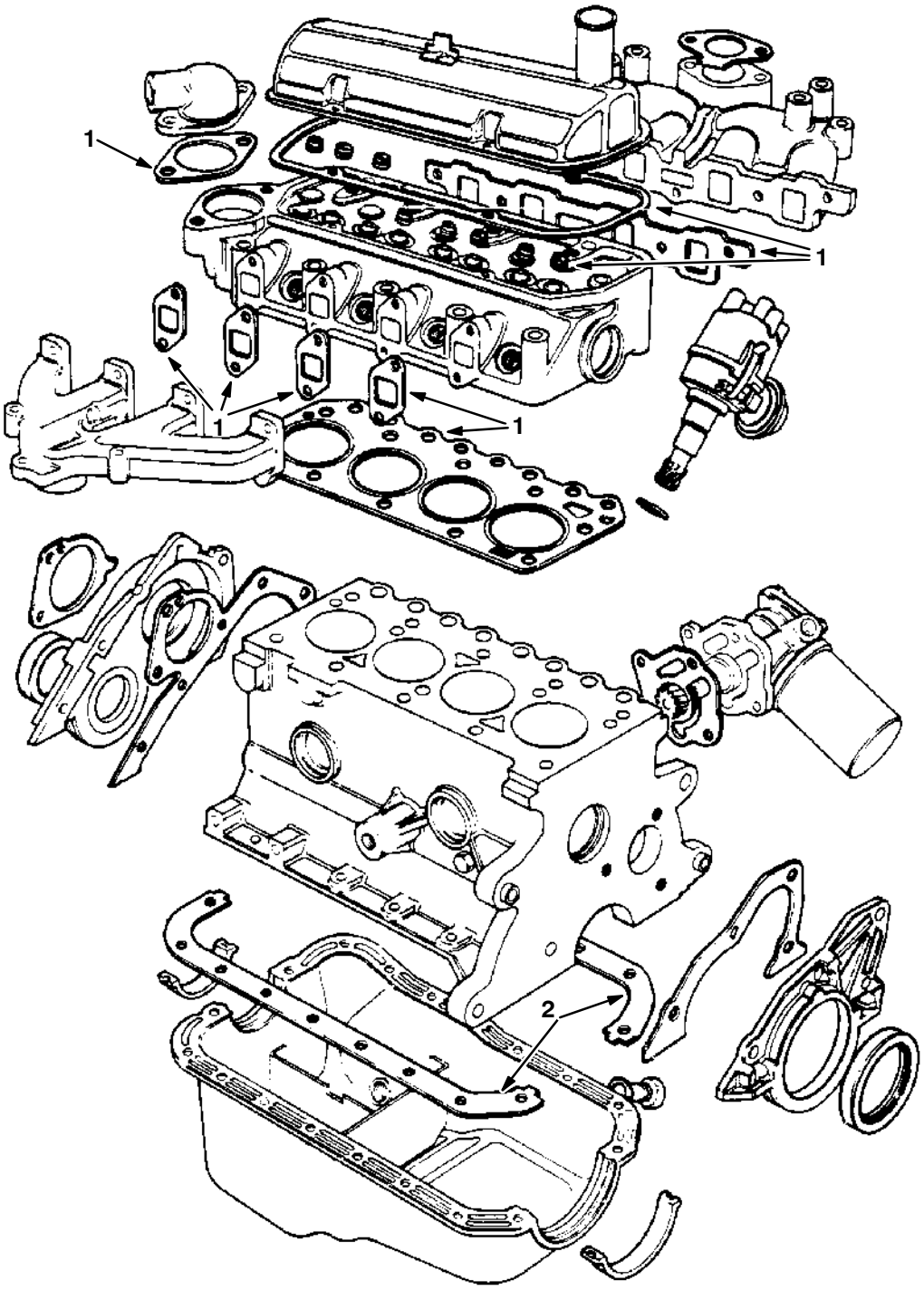

05495-04711

	Ref.	Tennant Part No.	Ford Part Number	Description	Qty.
∇		36253	88BX-6008-BA	Engine Gasket Kit, Complete	1
▲	1	36254	88BX-6014-BA	Engine Gasket Kit, Upper	1
▲	2	10806	A850X-6013-AA	Pan Gasket Kit	1

Fig. 11 - Flywheel Group

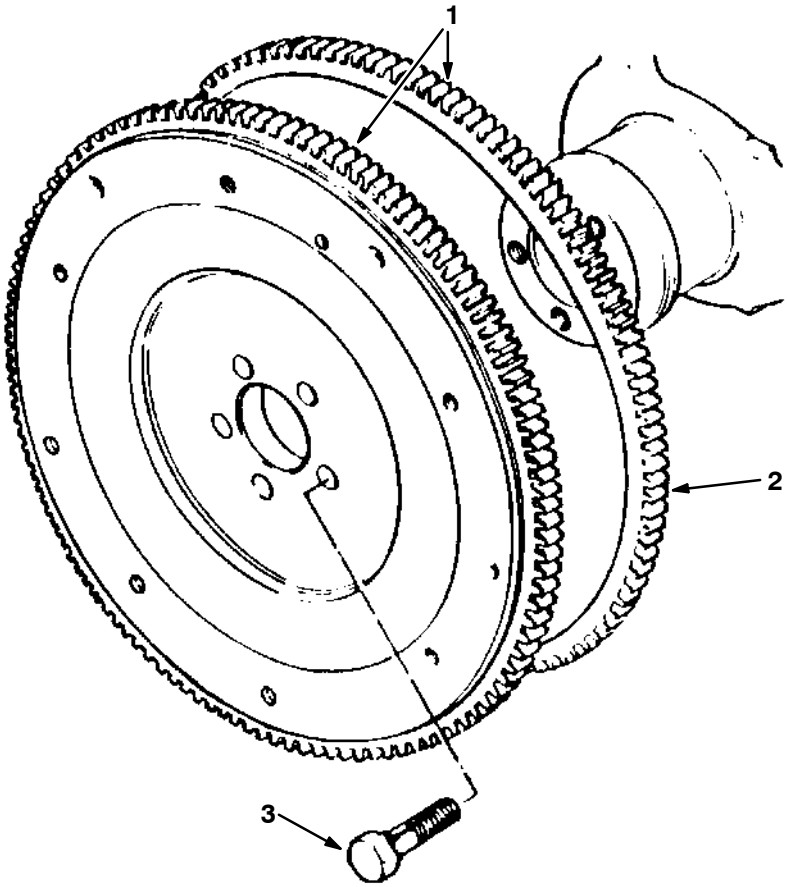

05502-04710

	Ref.	Tennant Part No.	Ford Part Number	Description	Qty.
▽	1	36591	89BM-6375-BA	Flywheel and Ring Gear Assembly	1
▲	2	52488	D8RZ-6384-A	Ring, Gear	1
	3	36630	D2RY-6379-A	Bolt, M10 x 22.5, Flywheel to Crankshaft	5
		36646	D1FZ-6397-B	Dowel	3

SECTION 7

CONTENTS **PAGE**

PART NUMBER TO PAGE NUMBER CROSS REFERENCE LIST 7-2
PART DESCRIPTION TO PAGE NUMBER CROSS REFERENCE LIST 7-16

PART NUMBER TO PAGE NUMBER CROSS REFERENCE LIST

Part Number	Page Number
A76SX-6013-AA	5-11
A850X-6013-AA	5-11
A850X-6013-AA	6-11, 6-16
D1FZ-6284-A	6-7
D1FZ-6345-A	5-5, 6-5
D1FZ-6397-B	5-17, 6-17
D1FZ-6608-B	5-11, 6-11
D2RY-6379-A	5-17, 6-17
D8RZ-6026-A	5-5, 6-5
D8RZ-6310-A	5-9, 6-9
D8RZ-6384-A	5-17, 6-17
D8RZ-6600-A	5-11, 6-11
D8RZ-6767-A	5-5, 6-5
DORY-6026-A	5-3, 5-5, 6-3, 6-5
DORY-6255-A	5-7, 6-7
DORY-6258-A	5-7, 6-7
DORY-6261-A	5-7, 6-7
DORY-6261-B	5-7, 6-7
DORY-6262-B	5-7, 6-7
DORY-6262-C	5-7, 6-7
DORY-6268-A	5-7, 6-7
DORY-6269-A	5-7, 6-7
DORY-6306-A	5-9, 6-9
DORY-6549-B	5-7, 6-7
DORY-6587-A	5-7, 6-7
DORY-6590-A	5-7, 6-7
DORY-6652-A	5-11, 6-11
DORY-6666-A	5-11, 6-11
DORY-6670-A	5-11, 6-11
DORY-6674-A	5-11, 6-11
DORY-6B316-A	5-9, 6-9
E1AZ-12A648-A	5-12, 6-12
E43-CP1	5-7
E43-CPI	6-7
E600113-S72	5-13, 5-14, 6-13, 6-14
E600116-S204	5-7, 6-7
E602165-S72	5-11, 6-11
E602187-S72	5-14
E602187-S82	5-9, 6-9, 6-14
E602351-S204	5-7
E602351-S72	6-7
E630024-S201	6-3
E630031-S101	5-7, 6-7
E630173-S71M	5-9, 5-11, 5-14, 6-9, 6-11, 6-14
E6330024-S201	5-3
E800157-S72	5-12, 6-12
E800509-S72	5-7, 6-7
E800512-S72	5-13, 6-13
E800516-S72	5-3, 6-3
E800518-S72	5-13, 6-13
E800519-S72	5-11, 6-11
E802166-S76	5-15, 6-15
E802666-S72	5-5, 6-5
E804335-S201	5-15, 6-15
E830135-S76	5-9, 6-9
E832108-S71M	5-14, 6-14
E832108S71M	6-13
E840126-S	5-3, 6-3
E865648-S	5-15, 6-15
E890100-S	5-5, 6-5
E93A-6253-A	5-7, 6-7
E9DZ-6730-B	5-11, 6-11
E9DZ-6734-B	5-11, 6-11
EB32108S71M	5-13
EN2166-S72	6-7
F1ZZ-6026-A	5-5, 6-5
F57Z-12A648-AA	5-12, 6-12
IB3614	4-15
MM300	3-52
MM300ES	3-52
MM300FR	3-52
MM300JP	3-52
MM302	3-52
N602166-S2	5-7, 6-7
N602166-S72	5-7
RT-351	5-14, 6-14
00500-15	4-12, 4-13
00966	4-15
01047	3-25
01314	2-7, 2-24
01318	2-13, 2-15
01684	2-3
01685	2-3
01997	2-35
02076	2-29
02129	3-23
02469	2-87, 2-89
02506-6	3-41
02603	4-9, 4-11
02641	2-51, 4-11
02643	4-11
02644	4-9, 4-11
02645	4-9, 4-11
02646	4-11
02647	4-9, 4-11
02650	4-3, 4-5, 4-7
02662	3-23
02705	4-3, 4-5, 4-7
02706	4-3, 4-5, 4-7
02709	4-3, 4-5, 4-7
02710	4-3, 4-5
02711	4-3
02712	2-71
02738	2-31
02740	2-37
02741	2-37
02887	2-27
03026	2-37
04414	2-29
04483	4-22
04733-10	2-21
04843	2-59
05686	2-59, 2-61
07251	2-31
07252	2-31
07464	2-35
07539	2-31, 2-33
07562	2-37, 3-43

Part Number	Page Number
07565	3-43
07598	2-35
07705	2-3, 5-3, 6-3
07707	5-9, 6-9
07710	5-11, 6-11
07711	5-11
07873	2-41
08013N	2-5
08165	2-27, 5-12, 6-12
08712	2-3
08713	2-3
09007	2-3
09010	2-3
09088	2-55
09342	2-7
09900-1	2-95
10075	5-11, 6-11
10137	2-48, 2-49
10144	3-45
10632-1	2-67, 2-69
10632-11	3-37
10632-12	3-25, 3-29
10632-13	2-47
10632-18	3-4, 3-5, 3-6, 3-7, 3-8, 3-9, 3-11, 3-13, 3-15, 3-27
10632-2	3-4, 3-5
10632-4	2-97
10632-5	2-23
10632-9	3-6, 3-7, 3-8, 3-9, 3-11, 3-13, 3-15
10652	2-45
10795	2-27
10806	5-11, 6-11, 6-16
11211	2-65
11442-1	2-35
11531	2-47
116336-ES100	5-9, 6-9
11636	3-50
116682-ES	5-11, 6-11
11842	2-61
11893	2-63
11984	2-41, 2-43
12267	2-77, 2-79
12271	2-17, 2-23, 3-25
12459	2-3
12962	2-71
13015	2-49
13114	2-84
13115	2-91
13156	2-81
13301	2-8, 2-9
13904	4-19
13907	4-19
14131	2-41
14242	2-55
14432	2-37
14601	2-17, 2-31, 2-33
14983	3-50
15066	3-21, 3-23
15555-1	2-41, 2-43
15648	2-13, 2-15
16081	2-15
16082	2-75
16213	2-59
16369	2-11
16376	2-91
16455	2-73
16695	4-12, 4-13, 4-14
16738	2-31
16786	2-73
17200	2-67, 2-69
17414	2-27, 2-35, 2-41
19200	2-27
19205	2-3, 2-27, 5-11, 6-11
19252	2-29
19320	4-5
19574	4-5
19637	2-87, 2-89
19644	2-87, 2-89
19647	2-87
19689	2-27
19760	2-35
19768	2-23
19827	3-16
21642	2-7
21720	2-43
21784	5-12, 6-12
21785	5-12, 6-12
21915	4-19
22169	2-77
222809	2-7
22308-3	2-45
23156	2-35
23163	2-91
23182	2-91
23191	2-21
23210	3-11, 3-13, 3-15
23211	3-11, 3-13, 3-15
23231	3-11, 3-13, 3-15
23274	3-37, 3-39
23498	2-71, 3-31, 3-33
23524	2-65
23788	2-57, 2-73
23863	3-23
23865	3-23
23866	3-23
23999-6	3-31, 3-33
24012	2-39
24013	2-27
24047	2-45
24339	2-51
24576-1	3-3, 3-11, 3-13, 3-15
24576	3-11, 3-13, 3-15
24899	2-81
24924	2-31
24928-1	2-45
25312	3-44
25610	2-43
26103	2-65
26395-1	2-45
26395-2	3-35
26431	5-14, 6-14

Part Number	Page Number
26496	2-45
27048	2-45
27767	3-29
29558	2-77
29584	2-77
30013	2-39, 2-93, 2-95
30251	2-81
30252	2-81
30253	2-81
30255	2-81
30268	3-29
30296	2-27
30297	2-27
30305	2-31, 2-35
30306	2-27
30316	2-27
30320	2-31, 2-33
30324	2-31, 2-33
30327	5-12, 6-12
30407	2-29, 2-37, 2-49
30468	2-27
30480	2-31, 2-33
30481	2-31, 2-33
30533	3-40
30553	2-38
30559	2-38
30570	2-38
31249	3-23
31354	4-12, 4-13, 4-14
31373	4-14
31375	4-12, 4-13
31377	4-14
31381	4-12, 4-13
31384	4-14
31507	3-29
31516	2-27
31517	2-47
31518	2-47
31524	2-37
31526	2-38
31543	2-31, 2-35, 3-29
31550	2-31
31599	2-84
31613	2-91
31719	2-89
31755	2-47
31922	3-3
32126	2-51
32822	3-31, 3-33
33671	2-48
33951	2-31, 2-33
34096	2-65
34176	4-12, 4-13
34280	3-23
34330	2-21
34359	2-75
34392	2-65
34394	2-87
34421	2-87
34725	2-65
34805-S8	5-7, 5-11, 6-7, 6-11

Part Number	Page Number
34848	3-3
34868	2-97
34877	3-31, 3-33
35033	2-84
35296	3-29
353055-S7	5-5, 6-5
35488	2-89
35493	4-15
357966-S	5-7, 6-7
35843	3-39
35905	3-11, 3-13, 3-15
36050	2-3, 2-41, 2-43
36253	6-16
36254	6-16
36257	5-9, 5-13, 6-9, 6-13
36259	5-9, 6-9
36262	5-9, 6-9
36263	6-5
36264	6-5
36267	5-5, 6-5
36268	5-5, 6-5
36272	5-5, 6-5
36273	5-5, 6-5
36274	5-5, 6-5
36275	6-5
36276	5-5, 6-5
36277	5-5, 6-5
36278	5-5, 6-5
36279	6-3
36281	6-3
36297	5-3, 6-3
36298	5-3, 6-3
36300	6-3
36307	5-3, 6-3
36315	5-3, 6-3
36318	5-3, 6-3
36319	5-3, 6-3
36321	6-3
36322	5-8, 6-9
36324	5-3, 6-3
36325	5-3, 6-3
36328	2-13, 2-15
36330	5-3, 6-3
36331	6-3
36332	5-13, 6-13
36337	5-13, 6-13
36338	5-13, 6-13
36339	5-13, 5-14, 6-13, 6-14
36340	6-7
36342	5-7, 6-7
36343	5-7, 6-7
36344	5-7, 6-7
36345	5-7, 6-7
36348	5-7, 6-7
36349	5-7, 6-7
36372	5-7, 6-7
36373	5-7, 5-11, 6-7, 6-11
36374	5-7, 6-7
36375	5-7, 6-7
36381	5-7, 6-7
36382	5-7, 6-7

Part Number	Page Number
36383	5-7, 6-7
36384	5-7, 6-7
36389	5-7, 6-7
36390	5-7, 6-7
36402	5-7, 6-7
36405	5-7, 6-7
36406	5-7, 6-7
36407	5-7, 6-7
36408	5-7, 6-7
36409	5-7, 6-7
36410	5-9, 6-9
36411	5-9, 6-9
36412	5-9, 6-9
36413	5-9, 6-9
36414	5-9, 6-9
36415	5-9, 6-9
36416	5-9, 6-9
36418	5-9, 6-9
36419	5-9, 6-9
36421	6-9
36421	5-9
36422	5-9, 6-9
36423	5-9, 6-9
36424	5-9, 6-9
36430	5-9, 6-9
36431	5-9, 5-11, 5-14, 6-9, 6-11, 6-14
36432	6-9
36433	6-9
36438	3-11, 3-13, 3-15
36439	3-11, 3-13, 3-15
36445	6-9
36454	5-9, 6-9
36463	5-9, 6-9
36467	5-9, 6-9
36469	5-9, 6-9
36483	5-9, 6-9
36493	5-9, 6-9
36590	5-9, 6-9
36591	5-17, 6-17
36630	5-17, 6-17
36646	5-17, 6-17
36658	2-3, 2-71
36661	2-3, 2-71
36663	2-3, 2-71
36665	2-3, 2-71
36666	2-71
36748	5-11, 6-11
36764	5-11, 6-11
36765	5-11, 6-11
36780	5-11, 6-11
36867	5-11, 6-11
36881	5-11, 6-11
36904	5-11, 6-11
36923	5-11, 6-11
36924	5-11, 6-11
370008	2-5
37053	5-11, 6-11
37083-1	3-27
37098	5-11, 6-11
37099	5-11, 6-11
37127	5-11, 6-11
37157	5-11, 6-11
37181	5-9, 5-14, 6-9, 6-14
37189	5-14, 6-14
37193	5-14, 6-14
37194	5-12, 6-12
37195	5-12, 6-12
37196	5-12, 6-12
37198	5-12, 6-12
37199	5-12, 6-12
37306	5-7, 6-7
37307	5-7, 6-7
37312	5-9, 6-9
37313	5-3, 5-5, 6-3, 6-5
37316	5-7, 6-7
37317	5-7, 6-7
37321	5-9, 6-9
37327	5-14, 6-14
37337	5-7, 6-7
37403	5-11, 6-11
374504	2-83
374505	2-83
374506	2-31
374507	2-63
374513	2-29
374514	3-29
374515	3-29
374516	2-38
374517	2-7
374520	2-59
37555	4-12, 4-13, 4-14
37693	5-7, 6-7
37694	5-7, 6-7
38242	5-7, 6-7
38315	4-9, 4-11
38490	4-9, 4-11
38978	3-52
39025	5-15, 6-15
39026	5-15, 6-15
39038	5-15, 6-15
39040	5-15, 6-15
39041	5-15, 6-15
39042	5-15, 6-15
39043	5-15, 6-15
39044	5-15, 6-15
39045	5-15, 6-15
39046	2-3, 5-15, 6-15
39047	5-13, 6-13
39210	2-95
39272	2-49
39308	2-73
39310	2-51
39527	4-12, 4-13
39577	2-59
39780-1	2-31, 2-35
39780	2-97
40362	2-91
40514	2-84
40585	2-41
40607	2-35, 2-97
40625	2-27
40678	2-63, 2-67, 3-3, 3-16

Part Number	Page Number
41016	2-15, 2-21
41845	3-25
41980	5-3
41981	5-3
41982	5-3
41984	5-3
41985	5-5
41986	5-5
41987	5-5
41988	5-7
41989	5-8
41990	5-9
41991	5-9
41992	5-9
41995	5-16
41996	5-16
41997	5-17
42120-1	2-65, 2-73
42124	3-35
42216	2-91
42223	2-96
42226	2-93
42361	6-9
43555	3-31, 3-33
43844	2-33, 2-43
44078	2-24
44166	3-35
44255	2-71
44681-1	3-5, 3-7, 3-9
44681-2	3-5, 3-7, 3-9
44681	3-5, 3-7, 3-9
44868	2-84, 2-95, 2-96
44869	2-81, 2-93
44906	2-11, 2-65, 3-37, 3-39
45142	3-29
45214	2-13
45272	3-6, 3-7
45482	2-84
45628	4-12, 4-13, 4-14
45779	3-4, 3-5, 3-6, 3-7, 3-8, 3-9
45780	2-7
45786	2-53, 3-48
46236	2-41, 2-43, 2-71, 2-97, 3-27
46480	2-51
46481	2-15
46482	2-91
46983	2-59
47167	3-29
47501	2-75
47504	2-27, 2-75
47508	2-75, 2-96
47518	2-93
47522	2-21
47638	2-93
47719	2-73
47720	2-45
47745	2-75
47752	2-96
47753	2-84
47754	2-93, 2-95
47801	2-51, 2-65
48079	2-61
48126	2-43
48267	2-41, 2-43
48570	3-3
48751	2-95, 4-19
48760	2-95
48813	4-15
48841	3-52
49263	2-21
49266	2-48, 2-49, 2-97, 3-3, 3-4, 3-5, 3-6, 3-7, 3-8, 3-9, 3-11, 3-13, 3-15
50332-1	2-31, 2-33
50332-2	2-31, 2-33
50421	2-93, 2-95
51109	2-57
51176	2-29
51225	2-75
51317	2-65, 2-81
51338	2-51, 2-55
51339	2-51, 2-55
51417	4-9
51448	2-81
51449	2-81
51534	2-65
51538	2-75, 3-37, 3-39
51545	2-57
51560-3	2-37
51562	2-57
51564	2-81
51570	3-16
51608	3-21
51677	3-21, 3-23
51715	2-81
51813	2-59
51839	2-35
52296	2-77, 2-79
52386	4-5, 4-7
52402	2-81
52424	2-35
52484	5-13, 6-13
52488	5-17, 6-17
52508	2-61
53029	2-33, 2-43
53076	2-96
53091	2-17
53400-1	2-45
53400-4	2-45
53417	3-42
53434	2-81, 4-12
53435	2-75, 4-14
53466	2-15, 2-21, 2-75, 2-91
53468	2-7
53485	2-84, 4-15
53491	2-7
53492	2-11
53494	2-11
53554	2-96, 4-8
53576	3-37, 3-39
53601	2-51, 4-22
53603	2-96, 4-3

Part Number	Page Number
53610	3-37, 3-39
53612	2-51
53640	2-53
53782	2-59
53783	2-37
53786	2-71
53816	3-47
53817	3-47
53818	2-53
53819–1	2-53
53819–2	2-53, 3-48
53819	2-53
53830	2-93, 4-20
53839	2-11
53883	3-31, 3-33
53894	3-31, 3-33
53895	3-31, 3-33
53910	2-65
53915	2-65
53927	2-59
53947	2-61
53950	2-61
53953	2-61
53954	2-59
53965	2-75
53984	2-75
53985	2-81
54009	3-35
54012	3-35
54013	2-3, 2-63
54014	2-3, 2-63
54015	2-61
54022	2-21, 4-16
54030	2-11
54050	2-75
54051	2-51
54052	2-51
54053	2-51
54055	2-11
54079	2-73
54088	2-45
54089	2-3, 2-63
54095	4-15
54096	2-65
54102	2-93, 2-95
54115	2-93, 2-95
54118	2-79
54121	2-71
54182	2-7
54184	2-7
54190	2-7
54192	2-7
54194	2-93, 2-95
54197	2-7
54199	2-81
54204	2-81
54205	2-61
54274	2-39, 2-47, 2-83
54275A	2-83
54333	2-27
54342	2-23
54343	2-45
54345	2-21
54390	2-55
54400	2-55, 2-57, 2-77, 2-79
54437	2-55
54467	2-55
54552	2-13
54553	2-15
54556	2-13
54567	2-55
54577	2-55
54607	2-57
54615	2-11
54616	2-57
54617	2-55
54619	2-55
54655	2-61
54659	2-81
54660	2-75
54663	2-79
54680	2-81
54693	2-81
54800	2-59
54840	2-79
54848	2-77, 2-79
54878	2-81
54911–16	2-29
54911–25	2-27
54911–32	2-47
54922	2-5
54923	2-5
54925	2-5
54927	2-5
54930	2-35
54934	2-77
54995	2-77, 2-79
54996	2-59
54997	2-61
54999	2-61
55021	2-63
55035	2-21, 2-24, 3-21
55037	3-27
55038	3-23
55042	3-27
55048	2-17
55073	3-19
55074	3-19
55130	2-71
55161	3-19
55162	3-19
55163	3-19
55164	3-19
55180	3-21
55181	3-25
55182	3-27
55195	2-31, 2-33
55211	3-27
55213	3-27
55215	3-29
55220	3-29
55221	3-29

Part Number	Page Number
55222	2-41, 2-43
55225	2-47
55226	3-29
55227	3-21
55228	3-21
55248	2-97, 3-4, 3-5, 3-8, 3-9, 3-11, 3-13, 3-15
55270	3-21
55302	3-27
55347	2-15
55393	3-21
55395	3-21
55404	3-27
55433	2-8, 2-9
55446	2-93, 2-95
55453	3-27
55459	3-29
55461	3-25
55462	2-73
55463	2-73
55489	3-31, 3-33
55586	2-65, 2-81
55619	2-15
55685	2-93, 2-95
55686	2-95
55691	2-87, 2-89
55740	2-3, 2-15
55779	2-81
55797	2-67
55800	2-67
55805	2-67
55806	2-67
55809	2-67
55851	2-39
55859	2-29
55861	2-39
55864	2-3, 2-63
55870	2-63
55879	2-63
55884	2-63
55889	2-63
55890	2-3, 2-63
55892	2-63
55893	2-65
55902	2-71
55906	4-3
55914	2-65
55916	2-71
55922	4-3, 4-5
55925	4-7
55926	4-7
55929	4-3
55930	4-3, 4-5, 4-7
55931	4-3, 4-5, 4-7
55932	4-3, 4-5, 4-7
55937	4-3, 4-5, 4-7
55939	4-3, 4-5, 4-7
55956	2-67
55958	2-67
55959	3-21
55963	3-21
55964	3-35
55965	2-63
55968	3-21
55973	3-21
55976	3-29
55998	2-35
56185	2-21
56186	2-25
56187	3-21
56188	2-25
56198	2-21
56235	2-21
56346	2-23
56362	2-21
56373	2-21
56379	2-21
56385	2-21
56392	2-21
56398	2-21
56456	3-17
56546	3-21
56560	3-21
56595	3-17
56610	2-71
56621	3-31
56624	2-55, 2-57, 2-77, 2-79
56641	2-77
56662	2-77, 2-79
56690	2-91
56692	2-96
56799	3-21, 3-23
56820	2-51
56821	2-91
56827	2-95
56872	2-7, 3-51
56890	2-7
56914	2-8, 2-9, 3-51
56976A	2-35, 2-45
57064	4-8
57152	4-16
57156	4-16, 4-17
57167	2-7, 2-25, 3-25
57173	2-87, 2-89
57210	4-3, 4-5
57220	3-4, 3-5
57297	2-45
57370	4-9, 4-11
57373	4-9, 4-11
57374	4-9, 4-11
57375	4-9, 4-11
57536	3-27
57537	3-27
57702	2-11, 2-67, 3-23
57751	2-25, 3-3, 3-25, 3-27
57754	2-29
57755	2-29
57772	2-25, 3-25
57773	2-29
57803	2-25, 3-3, 3-25, 3-27
57807	3-25, 3-27, 3-29
57813	2-38

Part Number	Page Number
57872	3-29
57897	4-3, 4-5, 4-7
57912	3-29
57934	2-31
57935	2-21
57962	2-87, 2-89
57979	2-84, 2-96
57988	2-95
58078	2-65
58103	2-63
58120	2-3, 2-37
58121	3-43
58193	2-39
58242	4-8
58247	4-9
58288	2-55
58297	2-11
58308	3-3
58323	2-38
58346	2-37
58359	2-73
58482	2-71
58483	2-71
58494	2-17, 2-69
58500	2-67, 2-69
58518	3-4, 3-6, 3-8
58519	3-4, 3-6, 3-8
58520	3-4, 3-6, 3-8
58524	2-67, 2-69
58538	2-37
58540	2-83
58564	2-13, 2-15
58571	2-13, 2-15
58576	2-13, 2-15
58585	2-13, 2-15
58588	2-45
58589	2-45
58590	2-45
58592	2-27
58595	2-11
58596	4-16, 4-17
58645	2-73
58665	2-21
58667	2-21
58689	4-20
58748	2-21
58770	2-8, 2-9
58771	2-67
58811	2-13, 2-15
58823	3-23
58830	3-23
58831	3-21
58832	3-21
58842	2-51
58843	4-20
58845	4-20
58846	2-31
58847	4-20
58849	2-17
58858	2-91, 2-96
58872	2-77
58881	3-31, 3-33
58898	3-23
58974	3-21, 3-23
58977	2-17
58999	2-17
59004	2-67, 2-69
59012	3-31, 3-33
59013	3-31, 3-33
59014	2-83
59015	2-43
59016	2-67
59018	2-19
59019	2-17
59028	3-23
59031	3-23
59032	3-23
59033	3-23
59035	2-11
59104	3-31, 3-33
59105	2-63
59106	2-87, 2-89
59152	2-7
59189	2-63
59192	2-8, 2-9, 2-13, 2-15, 2-17
59194	2-9
59195	2-8
59211	3-23
59250	3-23
59297	3-23
59335	4-21
59377	2-19
59378	4-15
59379	4-8
59380	2-73
59384	3-40
59388	3-44
59395	3-11
59399	2-71
59431	2-5
59432	2-5
59437	3-27
59440	2-5
59442	2-67, 2-69
59447	3-4, 3-5
59448	2-67, 2-69
59508	3-37
59512	3-29
59514	2-17, 3-23
59515	3-23
59530	2-93, 2-95
59537	2-8
59538	2-9
59540	3-35
59542	2-73
59545	2-71
59549	2-13
59550	2-47
59551	2-47
59555	2-47
59557	3-27
59560	2-87, 2-89

Part Number	Page Number
59561	2-87, 2-89
59563	2-89
59564	2-87, 2-89
59565	2-87, 2-89
59567	2-87
59568	2-87, 2-89
59571	2-87
59572	2-87, 2-89
59573	2-87, 2-89
59574	2-87, 2-89
59575	2-87, 2-89
59576	2-87, 2-89
59577	2-93, 2-95
59579	2-87, 2-89
59581	2-87, 2-89
59582	2-87, 2-89
59585	2-87, 2-89
59621	2-24
59622	2-24
59623	2-24
59628	2-24
59629	2-24
59636	2-24
59647	2-19, 2-24
59649	2-83
59656	2-83
59657	3-27
59661	2-19
59662	2-7
59665	3-17
59666	3-17
59674	2-67
59680	2-3, 2-63
59681	2-3, 2-63
59682	2-67
59683	2-67
59685	2-3, 2-63
59686	2-3, 2-63
59687	2-3, 2-63
59688	2-3, 2-63
59692	2-8, 2-9
59693	2-71
59695	2-15
59703	2-13
59723	2-67
59734	2-83
59735	2-83
59737	2-67, 2-69
59738	2-67, 2-69
59739	2-67, 2-69
59760	2-9
59761	2-8
59766	2-11
59767	2-104
59768	2-104, 3-31, 3-33
59769	2-104
59771	2-11
59786	2-104
59789	2-91
59790	2-91
59797	3-25

Part Number	Page Number
59799	3-25
59802	2-51, 4-9
59803	3-25
59807	2-35
59808	2-35
59809	2-35
59811	2-37
59814	2-63
59821	2-63
59822	2-11
59824	2-24
59825	2-73
59827	2-73
59828	2-19
59829	2-19
59830	2-19
59840	2-73
59842	2-73
59844	2-71
59845	2-67
59849	2-73
59861	2-73
59866	2-73
59867	2-73
59870	2-13, 2-15, 2-93, 2-95
59881	2-47
59883	2-31
59887	2-41
59888	2-41
59892	2-45
59899	2-77
59919	3-31, 3-33
59920	3-3
59935	2-21
59940	2-21
59944	3-11
59945	2-41
59949	2-7
59962	3-3
59965	2-65
59966	2-65
59967	2-83
59970	2-23
59971	2-23
59974	2-23
59975	2-84
59976	2-23
59977	2-23
59978	2-23
59979	2-23
60278	2-103
60280	2-103
60281	2-103
60282	2-103
60283	3-3
60284	3-3
60287	3-21
60288	3-4, 3-5, 3-8, 3-9
60290	2-103
60292	2-48
60293	2-48

Part Number	Page Number
60294	2-49
60295	2-49
60296	2-103
60305	3-3
60307	3-4
60309	3-5
60312	3-6
60314	3-7
60316	3-8
60318	3-9
60372	3-16
60559	2-38
60751	3-3
60862	3-23
61288	2-91
61408	2-91
61488	3-46
61490	4-12, 4-13, 4-14
61497	2-27
61499	5-5
61500	5-5
61501	5-5
61524	5-9
61525	5-9
61526	5-9
61527	5-9, 6-9
61529	2-38
61531	2-38
61538	5-3, 6-3
61539	5-3
61540	5-7, 6-7
61545	6-9
61545	5-9
61546	5-9, 6-9
61547	5-9, 6-9
61548	5-9, 6-9
61549	5-9, 6-9
61550	6-9
61550	5-9
61551	6-9
61551	5-9
61552	6-9
61552	5-9
61556	5-12, 6-12
61891	4-7
61920	3-11, 3-13, 3-15
61931	2-38
62100	2-87, 2-89
62172	2-93, 2-95
62173	2-93, 2-95
62337	2-87, 2-89
62390	2-84
62595-21	2-7
62595-22	2-11
62595-23	2-11
62595-3	2-21
62595-4	2-21
62595-6	2-69
63234	2-61
63378	3-31, 3-33
63469-3	3-31, 3-33
63688	2-51
63689	2-51
63810	2-31, 2-33, 2-35, 3-29
63852	2-21
64320	3-31, 3-33
64535	2-69
64595	2-17, 2-69
64905	2-93, 2-95
65145-1	2-96
65241	4-17
65527	2-35
65553	3-25, 3-27
65561	3-25, 3-29
65869-1	2-3
66018	2-5
66019	2-5
66168	3-37
66175	3-37
66176	3-37, 3-39
66177	3-37, 3-39
66178	3-37, 3-39
66179	3-37, 3-39
66180	3-37
66181	3-37
66182	3-37
66183	3-37
66184	2-83
66197	3-21
66211	2-55
66213	2-55
66220	3-27
66221	3-21
67004	3-35
67290	2-59
67683	2-96
67767	2-7, 2-45, 2-48, 2-49
68441	2-65
68872	2-48, 2-49
68873	2-48, 2-49
69173	2-84
69234	2-24
69266	2-31
69901	2-67
69902	2-67
69903	2-79
69904	2-7
69906	2-17
69907	2-17
69908	2-73
69909	2-24
69910	2-93, 2-95
69911	2-93
69915	2-7
69923	3-31
69931	2-8, 2-9
69933	2-57
69935	3-31, 3-33
69937	3-31, 3-33
69941	2-3
69942	2-3
69951	2-17

Part Number	Page Number
69952	2-17
69953	3-31, 3-33
69954	2-59
69955	3-31, 3-33
69958	3-33
69962	2-59
69970	2-31
69972	2-13, 2-15
69973	2-13
69981	3-31, 3-33
69984	3-33
69986	2-17
69987	2-17
69990	2-83
70006	2-91
70094	4-5, 4-7
70095	4-5, 4-7
70096	4-5, 4-7
70097	4-5, 4-7
70098	4-5, 4-7
70099	4-5, 4-7
70100	4-5, 4-7
70101	4-5, 4-7
70102	4-5
70103	4-5, 4-7
70136	2-17
70142	2-17
70143	2-17
70145	2-17
70157	2-51
70158	2-55
70159	3-11, 3-13, 3-15
70160	2-38
70161	2-55
70173	2-43
70178	2-69
70182	2-69
70185	2-69
70193	2-69
70214	2-39
70221	2-45
70222	3-51
70223	3-51
70224	3-51
70225	3-51
70226	3-51
70227	3-51
70228	3-51
70229	3-51
70230	3-51
70239	2-29
70246	2-91
70248	2-15
70249	2-13
70252	2-15
70256	2-13
70263	2-29
70271	2-73
70272	2-73
70275	2-9
70276	2-8
70278	3-48
70279	3-48
70280	2-53, 3-48
70281	3-48
70284	2-7
70287	2-53
70297	3-49
71021	2-49
71022	3-46
71024	2-7
71025	3-31, 3-33
71038	2-49
71056	3-11
71057	3-25
71058	3-13, 3-21
71459	2-103
71540	2-75
71543	3-6, 3-7
71544	3-11, 3-13, 3-15
72024	3-23
72025–S7	5-7, 6-7
72049	3-25
72065	2-69
72066	2-3
72067	2-3
72068	2-3
72069	2-8, 2-9
72071	2-63
72080	3-15
72086	3-37, 3-39
72087	3-37, 3-39
72091	2-17
72094	3-15
72096	3-13
72099	3-25
72100	3-6, 3-7
72106	3-11
72109	2-23
72114	3-4, 3-5
72115	2-33
72118	2-8
72119	2-9
72120	2-8, 2-9
72127	2-45
72128	2-45
72129	2-59
72132	2-57
72133	2-83
72136	2-91
72138	2-11
72142	3-25
72143	3-31, 3-33
72147	2-47
72152	2-7
72154	2-19
72155	2-51
72156	2-7
72158	2-43
72159	2-63
72176	2-13, 2-15
72178	3-3, 3-37

Part Number	Page Number
72179	2-13, 2-15
72181	3-37
72191	2-43
72192	2-43
72432-S	5-11, 6-11
72473	2-13
72968	2-7, 2-8, 2-9, 3-51
72969	2-69
72971	2-69
73411	2-59
74092	4-12
74094	4-12, 4-13, 4-14
74095	4-12, 4-13
74096	4-12
74097	4-12, 4-16
74098	4-13
74099	4-13
74100	4-13, 4-14
74101	4-14
74102	4-14
74103	4-16
74104	4-9
74105	4-16, 4-17
74106	4-16
74107	4-9
74108	4-16
74109	4-16, 4-17
74110	4-16, 4-17
74111	4-16, 4-17
74112	4-16, 4-17
74113	4-16
74114	4-16
74115	4-16
74116	4-16
74117	4-16
74118	4-16
74119	4-9
74120	4-9
74126	4-20
74127	4-20
74143	4-5
74149	4-8
74150	4-8
74151	4-8
74152	4-8
74153	4-8
74155	4-8
74156	4-8
74157	4-8
74158	4-8
74159	4-8
74172	2-21, 4-17
74174	4-13
74180	4-7
74181	4-17
74182	4-17
74190	4-17
74195	4-17
74216	4-3
74218	4-17
74225	4-7

Part Number	Page Number
74226	4-7
74229	4-7
74230	4-7
74233	4-15
74235	4-7
74237	4-7
74248	4-5, 4-7
74250	4-13, 4-14
74251	4-17
74304	2-7
74310	2-69
74314	2-63
74345	2-31, 2-33
74352	2-69
74353	2-69
74355	2-77
74358	2-73
74374	3-39
74375	3-39
74379	3-39
74380	3-39
74381	3-39
74382	3-39
74383	3-39
74391	2-55, 2-57, 2-77, 2-79
74394	2-47
74398	2-91
74402	2-33
74406	2-43
74409	2-69
74419	2-73, 4-21
74428	3-23
74429	3-21
74430	3-21
74431	3-21
74433	3-25
74434	2-71
74438	3-31, 3-33
74439	3-31, 3-33
74443	2-31, 2-33
74453	2-41
74454	2-83
74456	2-13
74465	2-96, 4-5
74468	2-81, 4-13
74469	4-7
74475	2-59
74491	2-13
74493	2-13
75028	2-75
75128	2-19
75430	2-59
75809	6-9
75817	6-9
76315	2-96
76316	2-93, 2-95
76589-2	2-27
76736	2-41, 2-43
77097	2-51, 2-65, 2-73
77399	2-24
77BF-9K442-AA	5-12, 6-12

Part Number	Page Number
77BM-6256-AA	5-7, 6-7
77BM-6531-BB	5-7, 6-7
77BM-6584-CA	5-3, 6-3
77BM-6598-AB	5-7, 6-7
77BM-6K255-AC	5-7, 6-7
78122	2-45
78143	2-84, 2-91
78787	2-65
78881	2-33
79040	2-91
79399	2-27
79422	2-35
79425	2-3, 2-71
79768	2-96, 4-7
79785	4-19
79786	4-19
79787	4-19
79788	4-19
79789	4-19
79790	4-19
79791	4-19
79792	4-19
79793	4-19
79794	4-19
79795	4-19
79796	4-19
79798	4-19
79799	4-19
79800	4-19
79801	4-19
79802	4-19
79803	4-19
79804	4-19
79805	4-19
79806	4-19
79807	4-19
79808	4-19
79812	4-19
79813	4-19
79815	4-19
79820	4-19
79821	4-19
82063	3-4, 3-6, 3-8
82196	3-50
82200	3-5, 3-7, 3-9
82239	2-51
82342	2-11
82475	2-71
82483	2-63
82509	2-43
82661	2-39
82731	2-38
82739	2-97
82798	2-15
82831	2-81
83BM-6700-A4A	5-9, 5-13, 6-9, 6-13
84578	2-39
84581	2-75
84588	2-29
84604	2-29
84624	2-95
84641	2-33
84989	5-12, 6-12
85300	3-52
86041	2-38
86240	2-55, 2-57, 2-79
86330	2-41, 3-4, 3-5
86331	2-41, 2-69, 3-8, 3-9
86332	3-3, 3-4, 3-5, 3-8, 3-9
86333	3-6, 3-7
86751	2-57
86791	2-61
86BM-6617-AA	5-11, 6-11
86BM-6675-AA	5-11, 6-11
86BM-6K318-AA	5-9, 6-9
86HM-6701-AIA	5-9, 6-9
87337	2-67
87396	2-41, 2-43
87536	2-23
87583	2-25
87631	2-81
87676	2-15
87677	2-65
87866	2-23
87948	3-3
87AB-2A411-BA	5-12, 6-12
87AB-9H490-AA	5-12, 6-12
87YF-12405-AB	5-15, 6-15
88BM-6A557-AA	6-7
88BX-6008-AA	5-16
88BX-6008-BA	6-16
88BX-6014-AA	5-16
88BX-6014-BA	6-16
88WM-6518-AA	5-3, 6-3
88WM-6571-BB	5-3, 6-3
89BF-12024-A1B	5-15, 6-15
89BF-12283-AD	5-15, 6-15
89BF-12284-AD	5-15, 6-15
89BF-12286-AD	5-15, 6-15
89BF-12287-AC	5-15, 6-15
89BF-12297-AA	5-15, 6-15
89BF-6C315-AB	5-5, 6-5
89BF-9424-AD	5-12, 6-12
89BM-6010-EA	5-5
89BM-6010-FA	6-5
89BM-6011-BA	5-5
89BM-6011-DA	6-5
89BM-6019-AA	5-13, 6-13
89BM-6020-AA	5-13, 6-13
89BM-6049-DD	6-3
89BM-6049-HB	5-3
89BM-6051-B2C	5-3
89BM-6051-C2B	6-3
89BM-6055-AA	5-5
89BM-6055-BA	6-5
89BM-6056-A1F	5-3
89BM-6056-A1G	6-3
89BM-6057-A2E	5-3, 6-3
89BM-6065-DA	5-3, 6-3
89BM-6102-AA	5-9
89BM-6102-BA	5-9
89BM-6102-CA	5-9

Part Number	Page Number
89BM-6102-DA	6-9
89BM-6102-EA	6-9
89BM-6102-FA	6-9
89BM-6148-AA	5-9
89BM-6148-BA	5-9
89BM-6148-CA	5-9
89BM-6148-DA	6-9
89BM-6148-EA	6-9
89BM-6148-FA	6-9
89BM-6200-AD	5-9, 6-9
89BM-6211-AA	5-9, 6-9
89BM-6211-BA	5-9, 6-9
89BM-6211-CA	5-9, 6-9
89BM-6211-DA	5-9, 6-9
89BM-6211-EA	5-9, 6-9
89BM-6214-DB	5-9, 6-9
89BM-6251-AA	5-7
89BM-6251-BA	6-7
89BM-6303-CA	5-8
89BM-6303-DA	5-8
89BM-6303-DA	6-9
89BM-6312-AA	5-9, 6-9
89BM-6331-AA	6-9
89BM-6331-AA	5-9
89BM-6331-BA	5-9, 6-9
89BM-6331-CA	5-9, 6-9
89BM-6331-DA	5-9, 6-9
89BM-6331-EA	5-9, 6-9
89BM-6331-FA	6-9
89BM-6331-FA	5-9
89BM-6331-GA	6-9
89BM-6331-GA	5-9
89BM-6331-HA	6-9
89BM-6331-HA	5-9
89BM-6333-AA	5-9, 6-9
89BM-6333-BA	5-9, 6-9
89BM-6333-CA	5-9, 6-9
89BM-6333-DA	5-9, 6-9
89BM-6333-EA	5-9, 6-9
89BM-6333-FA	5-9, 6-9
89BM-6333-GA	5-9, 6-9
89BM-6333-HA	5-9, 6-9
89BM-6344-BA	5-9, 6-9
89BM-6375-AA	5-17
89BM-6375-BA	5-17
89BM-6375-BA	6-17
89BM-6500-AA	5-7, 6-7
89BM-6505-CA	5-3, 6-3
89BM-6507-AA	5-3
89BM-6507-BA	6-3
89BM-6513-AA	5-3, 6-3
89BM-6529-AB	5-7, 6-7
89BM-6565-AA	5-7, 6-7
89BM-6582-AA	6-3
89BM-6659-AA	5-11, 6-11
89BM-6784-AA	5-11, 6-11
89BM-6A341-AA	5-9, 6-9
89BM-6A341-BA	6-9
89BM-6A341-BA	5-9
89BM-6A536-AA	5-3, 6-3
89BM-6A557-AA	5-7
89BM-6K340-AA	5-9, 6-9
89BM-6K528-AB	5-7, 6-7
89BM-8507-AA	5-14, 6-14
89BM-9441-AB	5-12, 6-12
89BM-9448-BA	5-12, 6-12
91BM-6582-GA	5-3
92BM-6750-AA	5-11, 6-11
92BX-8591-AA	5-14, 6-14
93BM-6010-AA	5-5
93BM-6011-AA	5-5
93BM-6012-AAC	5-5

PART DESCRIPTION TO PAGE NUMBER CROSS REFERENCE LIST

Numbers

355L Oper/ Video VHS, 3-52

A

Actuator, Governor, 2-31, 2-33
Adapter Plate Assembly, 4-8
Adapter, Vacuum, 5-12, 6-12
Adapter, 5-5, 6-5
Adaptor Wldt, Vac Wand, 3-35
Adaptor, Carburetor, 2-31
Adaptor, Mtg, Carb, Machine, 2-31, 2-33
Air Cleaner, 2-37
Alarm Kit, Bu A/v 355L, Cab with Pressurizer, 3-15
Alarm Kit, Bu A/v 355L, Cab, 3-13
Alarm Kit, Bu A/v 355L, 3-11
Alternator, 50A/12V Mando, 2-38
Altrntr Pulley Md, 2-38
Angle, Cable Keeper, 2-55, 2-57, 2-77, 2-79
Angle, Door Jamb, Lower, Rear, 3-21
Angle, Door Jamb, 3-21
Angle, Filler, 3-51
Angle, Hopper, 2-63
Angle, Stop, 3-37, 3-39
Arm Assy, Hopper w/label, 2-73
Arm Assy, Lift, 2-75
Arm Assy, Safety w/label, 2-73
Arm Wldt, Brush, Lh, 2-81
Arm Wldt, Idler, W/Brush, 2-81
Arm, Alternator, 2-38
Arm, Control, Pintle, 2-61
Arm, Tensioner, 5-7, 6-7
Arm, Valve Rocker, Left, With Screw, 5-7, 6-7
Arm, Valve Rocker, Right, With Screw, 5-7, 6-7
Arm, Windshield Wiper, Panto, 3-25
Arm, 2-61
Armrest Cab, 3-23

B

Back Plate Assembly, 4-8
Backplate Assy Ce, 4-5, 4-7
Backplate Assy, 4-3
Balance Ring, 4-9, 4-11
Ball, Check, 4-16
Ball, 4-19
Balljoint .250-28 Ball Stud, 2-31, 2-33
Balljoint .250-28 Body/Clip, 2-31, 2-33
Balljoint .250-28, 2-17, 2-31, 2-33
Balljoint, Rod End, 2-51
Bar, Link, 2-65
Bar, Shaker, 2-71
Bar, Spring, Shaker, 2-71
Bar-Flt .06T 1.00W 4.00L,Rbr, 2-3, 2-71
Bar-Flt .06T 4.00W 5.00L,Rbr, 2-3, 2-71
Battery, 12V, Cc Amps:475 Wet, 2-48, 2-49
Battery, 12V, Ccamps: 600 Dry, 3-45
Bearing Cam, 4-5, 4-7
Bearing Kit, Thrust, 4-3
Bearing Sf1 Actuator, 2-31
Bearing Thrust, 4-14
Bearing, Connecting Rod, 0.001 US, 5-9, 6-9
Bearing, Connecting Rod, 0.010 US, 5-9, 6-9
Bearing, Connecting Rod, 0.020 US, 5-9, 6-9
Bearing, Connecting Rod, 0.030 US, 5-9, 6-9
Bearing, Connecting Rod, Std, 5-9, 6-9
Bearing, Flange .625 Bore, 2-59
Bearing, Flange, 2-13, 2-15
Bearing, Inner Race, 4-3
Bearing, Journal 1.25 Idx1.0Lg, 2-73
Bearing, Journal, 2-59
Bearing, Needle, 4-16, 4-17
Bearing, Roller, 4-3
Bearing, Self Aligning, 2-79
Bearing, Std ID + 0.020 OD, 5-7, 6-7
Bearing, Std ID - Std OD, 5-7, 6-7
Bearing, Thrust .62X1.25X.06, 2-59
Bearing, Thrust, 2-59, 4-7
Bearing, Trunnion, 4-3
Bearing&Clr ,1.25B 2.44D 1.41W, 2-81

Bearing–Ball, .669B 1.575D 0.472W, 2-38
Bearing–Ball,1.38B 2.83D 0.67W, 2-81
Bearing–Cone, 1.38Bore 0.71Wth, 2-51, 2-55
Bearing–Cup , 2.56Dia 0.55Wth, 2-51, 2-55
Bearing–Flange,2 Hole .625Bore, 2-65
Bearing–Self Align 1.250 Bore, 2-65, 2-73
Bearing, 4-12
Bellows Assy, Brush Lift, 2-79
Bellows Assy, Valve, 2-24
Belt, Seat, 3-40
Belt, V Hc41 X 32.5, 2-38
Belt, V Hc41 X 33, 2-38
Blade, Deflector, 2-7
Blade, Windshield Wiper, 18”, 3-25
Block, Cylinder, With Crank, Piston, Rings, etc., 6-5
Block, Cylinder, With Crank, Pistons, Rings, etc., 5-5
Block, Cylinder, 5-5, 6-5
Block, Pivot (Repl. By 72179), 2-15
Block, Pivot (Replaced By 72179), 2-13
Blower Kit 355L, 3-31
Blower Kit, W/Ohg, 3-33
Blower, Assy, 3-27
Body Assembly, 4-8
Bolt, Connecting Rod, 5-9, 6-9
Bolt, Cylinder Head, 5-3, 6-3
Bolt, Hold–Down, 2-49
Bolt, Hook, Rh, 2-13
Bolt, Latch, 2-19, 3-23
Bolt, M10 x 22.5, Flywheel to Crankshaft, 5-17, 6-17
Bolt, M6 x 14, Oil Pan, 5-11, 6-11
Bolt, M6 x 16, Tensioner to Block, 5-7, 6-7
Bolt, M6 x 18, Front Cover to Block, 5-13, 6-13
Bolt, M6 x 40, Front Cover and W/P to Block, 5-14, 6-14
Bolt, M6 x 40, Front Cover to Block, 5-13, 6-13
Bolt, M6 x 45, Front Cover to Block, 5-13, 6-13
Bolt, M6 x 55, Tensioner to Block, 5-7, 6-7
Bolt, M8 x 16, 5-7, 6-7
Bolt, M8 x 20, 5-9, 5-14, 6-9, 6-14
Bolt, M8 x 25, 5-12, 6-12
Bolt, Main Bearing Cap, 5-5, 6-5
Bolt, Pulley to Crankshaft, M12 x 32, 5-9, 6-9
Bolt, Rocker Support, 5-7, 6-7
Bolt–Carrm 8X1.25 40 4.6 Pltd, 2-7
Bolt–Eye, .25–20Th .25B 1.4L, 2-61
Bolt–Eye, .25–20Zinc.56D 2.00L, 2-63
Bolt–U, 1.13 Id, 3-29
Bolt, 4-9, 5-11, 6-11
Boot – Circuit Breaker, 3-3
Boot, Batt. Term. 1–2 Ga Black, 2-48, 2-49
Boot, Batt. Term. 1–2 Ga Red, 2-48, 2-49
Boot–Circuit Breaker, 2-25, 3-25, 3-27
Bracket Assy, Isolator, 2-61
Bracket Repl Kit, Switch, 3-11
Bracket Replacement Kit, Taillight, 2-7
Bracket Sppt, Control Rod, 2-59
Bracket Wldt, Engine, 2-29
Bracket Wldt, Filter, 2-71
Bracket Wldt, Hpr Cvr Sprng, 2-69
Bracket Wldt, Light, Rotating, 3-6, 3-7, 3-11
Bracket Wldt, LPG w/label, 2-45
Bracket Wldt, Mtg, Steering,Lh, 2-21
Bracket Wldt, Mtg, Steering,Rh, 2-21
Bracket Wldt, Notched, 2-21
Bracket Wldt, S Br, 2-77
Bracket Wldt, Support, Blower, 3-31, 3-33
Bracket Wldt, Taillight, 2-7
Bracket Wldt, Valve, 2-21
Bracket Wldt,Mtg,Eng, Rear, Rh, 2-29
Bracket Wldt,Mtg,Eng,Rear, Lh, 2-29
Bracket Wldt, 2-71
Bracket, Alarm, Back–Up, 3-13
Bracket, Back–Up Alarm, 3-21
Bracket, Bumper Stop, 3-3
Bracket, Bumper, 2-67
Bracket, Cable Spring, 2-69
Bracket, Deflector, Eng Cover, 2-17
Bracket, Door, 2-19, 2-67
Bracket, Drive Motor, 2-51
Bracket, Filter, 2-71
Bracket, Flap, Recirculation, 2-7
Bracket, Flasher, 3-3, 3-11, 3-13, 3-15
Bracket, Grille, 2-13, 2-15
Bracket, Gusset, Corner, Lh, 2-67, 2-69
Bracket, Gusset, Corner, Rh, 2-67, 2-69

Bracket, Hanger, Muffler, 2-39
Bracket, Inside, 2-11
Bracket, Latch, Bolt, Eng Cover, 2-17
Bracket, Latch, Bolt, 3-23
Bracket, Latch, Door, 2-19
Bracket, Latch, 2-17
Bracket, Light, SBDC, 3-3
Bracket, Motor, 2-75
Bracket, Mounting Motor, 2-83
Bracket, Mtg. Latch, 2-13
Bracket, Mtg, Actuator, 2-27
Bracket, Mtg, Air Cleaner, 2-37
Bracket, Mtg, Back-Up Alarm, 3-11
Bracket, Mtg, Hinge, Lh, 2-9
Bracket, Mtg, Hinge, Rh, 2-8
Bracket, Mtg, Latch (Replaced By 74456), 2-13
Bracket, Mtg, Latch, 2-15
Bracket, Mtg, Light, Ohg, 3-4, 3-5
Bracket, Mtg, LPG (Repl. By 72127), 2-45
Bracket, Mtg, LPG, 2-45
Bracket, Mtg, Relief Valve, 2-45
Bracket, Mtg, Spring, 2-67
Bracket, Mtg, Tube, 3-31, 3-33
Bracket, Mtg, Valve, 2-93, 2-95
Bracket, Mtg, Vaporizer, 2-35
Bracket, Propel, 2-61
Bracket, Radiator Mount, 2-47
Bracket, Rear Grill Stop Bolt, 2-15
Bracket, Repl Kit, Latch, 2-17
Bracket, Sbdc, 3-37, 3-39
Bracket, Side Brush, 2-77
Bracket, Speed Limiter, 2-59
Bracket, Stop Bolt, Rear Grill, 2-13
Bracket, Switch, 3-3
Bracket, Tiedown, 3-50
Bracket, Valve, 3-29
Bracket, 2-11, 2-77, 2-79
Brake Assy, 2-55
Brake Repair Kit, 2-55
Brake Shoes, 2-55
Breaker-Circuit, 2.5 Resetbl, 2-25
Breaker-Circuit, 15 Resetbl, 2-25, 3-25, 3-27
Breather, Hyd Cap (Includes Gasket), 2-91
Breather, Hyd, 20 Micron, 2-91
Breather, Hyd, 2-91
Brg, Brake, 2-57
Brg, Snap In - Nyliner .38 Id, 3-31, 3-33
Brush-Side Swp -23 Dia-Flatwire, 2-5
Brush-Side Swp -23 Dia-Nylon, 2-5
Brush-Side Swp -23 Dia-Poly, 2-5
Brush-Sweep Spl-45Lg-24 Single Row-Fiber and Wire, 2-5
Brush-Sweep Spl-45Lg-24 Single Row-Nylon, 2-5
Brush-Sweep Spl-45Lg-5 Double Row-Nylon, 2-5
Brush-Sweep Spl-45Lg-8 Double Row-Nylon, 2-5
Brush-Sweep Spl-45Lg-8 Double Row-Poly and Wire, 2-5
Brush-Sweep Spl-45Lg-8 Double Row-Poly, 2-5
Brush-Sweep Spl-45Lg-8 Double Row-Wire, 2-5
Brush-Sweep Spl-45Lg-Wedg Poly, 2-5
Bshg,Flange, 3-37, 3-39
Bulb #53 12V, 3-3
Bulb GE, 3-16
Bulb, 12V .9A 15Cp#1004, 3-11, 3-13, 3-15
Bulb, #194, 3-3
Bulb, 12V .5A 4CP#1157, 2-7
Bulb, General Electric, 3-4, 3-5, 3-6, 3-7, 3-8, 3-9
Bulb, 3-25
Bumper Wldt, Front, 2-67, 2-69
Bumper, Pressurizer, 3-27
Bumper, Safety Arm, 2-73
Bumper, Threaded, 2-61
Bushing, Isolator-Inner,Rbr., 2-93, 2-95
Bushing, 4-19

C

Cab Wldt, 3-21
Cable, .06D X 5.75, 3-23
Cable, 9” Bundle Dia, 2-7
Cable, Brake, Service, 2-55
Cable, Choke, 2-31
Cable, Cover, Safety, 2-69
Cable, Door, Access, 2-67, 3-23
Cable, Lift, M Br, 2-79
Cable, Lift, S Br, 2-77
Cable, Parking Brake, 2-57
Cable, 2-11
Cabletie Mount, Adhesive, 2-97, 3-4, 3-5, 3-8, 3-9, 3-11, 3-13, 3-15
Cam, 2-61
Camplate Ce, 4-5, 4-7
Camshaft, 5-7, 6-7
Cap Assembly, 4-19
Cap Assy, Oil Filler, Ford, 2-27
Cap Screw, 4-8
Cap, End, 4-16, 4-17
Cap, Gas, 2-41, 2-43
Cap, Hub, 2-55
Cap, Hyd Reservoir W/dipstick, 2-91
Cap, Radiator, 2-47
Cap, Screw Cl, 4-13
Cap, Screw, 4-13, 4-16, 4-17
Cap, Valve Stem, 2-53, 3-48
Carb Repair Kit Ft, 2-31
Carb.Repair Kit-Lp, 2-33
Carburetor Asm, LPG, 2-33
Carburetor, Zenith, 2-31
Cartridge, Solenoid Valve, 4-15
Catch-No-Strike, 3-27
Chain, Link#2/0, 5Links Plain, 2-7
Chain,Jack#12, 6Links,Znc, 3-35
Chain, 5-7, 6-7
Channel Wldt, Corner Post, 2-13
Channel Wldt, Heater, 3-29
Channel Wldt, Lh, 2-67
Channel Wldt, Rh, 2-67
Channel, Mtg, Radiator, 2-47
Channel, Retainer, Seal, Rear, 2-7
Channel, Rigid, 3-21, 3-23
Channel,Flexible,L.H, 3-21
Channel,Glassrun,Flx#B127, 110, 3-23
Check Kit, LD DK, 4-20
Chrome Pltd Cam Shft, 2-55
Circuit Breaker, 15 Resetbl, 3-3
Clamp - Cable, .69 Dia .62 Wth, 2-7
Clamp Assembly Dn, 2-37
Clamp Wldt, Tube, Blower Wand, 3-31, 3-33
Clamp, Cable .44D .62 Wide, 3-3
Clamp, Cable .44D .62Wide, 2-63, 2-67, 3-16
Clamp, Cable, 0.25Dia 0.56 wth, 3-27
Clamp, Hose, 2-7, 2-15, 2-21, 2-75, 2-81
Clamp,Mounting,Cyclopac Aircl., 2-37
Clamp-Cable, .69Dia. .62Wth, 2-48, 2-49
Clamp-Cable, 0.25Dia 0.56Wth, 2-41, 2-43, 2-71, 2-97
Clamp-Cable, 0.38Dia 0.38Wth, 3-35
Clamp-Cable, 0.38Dia 0.62Wth, 2-41, 2-43
Clamp-Cable, 0.56Dia 0.38Wth, 2-45
Clamp-Cable, 0.69Dia 0.62Wth, 2-45
Clamp-Cable, 1.00Dia. .62Wth, 2-24
Clamp-Cable, 1.50d 1.00w Stl, 2-91
Clamp-Cable, 2.25Dia 1.00Wth, 2-15, 2-21
Clamp-Cable, 2.50Dia 1.00Wth Ss, 2-51
Clamp-Muffler,For 1.62 Od Tube, 2-39
Clamp-Wormdrive, 0.25-.62D, 2-33
Clamp-Wormdrive, 0.25-0.62 D, 2-43
Clamp-Wormdrive, 0.31- 0.88D, 2-27
Clamp-Wormdrive, 0.56- 1.06D, 2-31, 2-33, 2-35, 3-29
Clamp-Wormdrive, 1.06- 2.00D, 2-47
Clamp-Wormdrive, 1.62- 3.50D, 3-31, 3-33
Clamp-Wormdrive, 1.81- 2.75D, 2-37
Clamp-Wormdrive, 3.56- 4.50D, 2-71, 3-31, 3-33
Clevis, Adjustable, 2-55
Clip (Replaced By None), 2-13
Clip Safety, 2-69
Clip, Cable, 2-55
Clip, Keeper, Open, 2-29, 2-37, 2-49
Clip, Pine-tree .236h Plastic, 2-24
Clip, Spring, 2-17

Clip-Finger Grip, 3-35
Coil and Bracket Assembly, Ignition, 5-15, 6-15
Coil, 4-15
Collar, Locking, 2-65
Column, Steering, 2-21
Cone, 4-19
Connector,Outlet Cylinder Head w/gasket, 2-27
Control Assembly, 4-16
Control Assy, Ignition Vsg4113, 2-31, 2-35
Control Box, Gov, 3 Speed, 2-21
Cooler-Hyd 12 0500, 2-15
Cord, Sponge, 2-3, 2-63
Core, Heater, 3-29
Coupling Assy, Flywheel, 2-29
Coupling,Quickdisc,, Shwd, 2-45
Cover and Seal Assembly, Cylinder Front, 5-13, 6-13
Cover Assy, Hopper (Repl. By 84570), 2-67
Cover Weldt, Engine, Blower Wand, 3-31, 3-33
Cover Wldt Replacement Kit, 3-25
Cover Wldt, Engine, 2-17
Cover Wldt, Press & Alarm, 3-15
Cover Wldt, Pressurizer, 3-27
Cover Wldt, Sbdc, 3-37, 3-39
Cover Wldt, Sppt, Seat, 2-11
Cover Wldt, 3-25
Cover, Battery, LPG, 2-49
Cover, Bracket, Armrest, 3-23
Cover, Heater, 3-29
Cover, Hopper, 2-69
Cover, O-Ring Ce, 4-5, 4-7
Cover, Rocker Arm, 5-3, 6-3
Cover, Rocker Switch Seal, 3-25, 3-27, 3-29
Cover, Steering, 2-21
Cover, Terminal, 2-29
Cover, Trunion Ce, 4-5, 4-7
Cover, 4-5, 4-7
Cplt Brush Kit Md, 2-38
Cradle-Lp Tank Weldmt, 2-45
Crankshaft Assembly, 5-8, 6-9
Cup Assembly Dn, 2-37
Cylinder, Hydraulic, 4-21, 4-22
Cylinder-Hyd (See Breakdowns), 2-51, 2-73
Cylinder-Hyd,2.0X 4.0Da2500Psi, 2-65

D

Dampner, Engine, 2-29
Detent Adaptr, 4-19
Detent Kit, Spool #1, 4-20
Detent Kit, Spool #2, 4-20
Door Wldt, Brush, Lh, 2-9
Door Wldt, Brush, Rh, 2-8
Door Wldt, Cab, 3-23
Door Wldt, Dump, 2-63
Door Wldt, 2-19
Door, Access w/label, 2-67
Door, Dust, 2-65
Dowel Pin, Connecting Rod, 5-9, 6-9
Dowel, Cylinder Head to Block, 5-3, 6-3
Dowel,Cyl.Block To Flywhl.Hsg., 2-29
Dowel, 5-7, 5-17, 6-7, 6-17
Draincock,End.Block, 2-47
Drive Shaft Assembly, 4-8
Drive, 4-9, 4-11, 4-12, 4-13, 4-14, 4-16, 4-17
Duct, Outlet, Blower Wand, 3-31, 3-33
Duct, Vinyl .40X.75X16.0 .25D, 2-69
Duct, Vinyl .40x.75x26.0 Lg .25D, 3-3
Duct, Vinyl 10.0 In., 3-5
Duct, Vinyl 10.0 In, 3-4
Duct, Vinyl 16.0 In., 3-8, 3-9
Duct, Vinyl 24.0, 3-21
Duct, Vinyl 26.0 In., 3-4, 3-5, 3-8, 3-9
Duct, Vinyl 3.5 In., 3-6, 3-7
Duct, Vinyl 6.0 In., 3-4, 3-5
Duct, Vinyl, 10.0 In, 2-41
Duct, Vinyl, 16.0 In, 2-41
Dust Control Kit Side Brsh 355, 3-37, 3-39

E

Element Kit, Air, Safety, 3-43
Element, Air Filter, 2-3, 2-37
Element, Safety, 3-43
End Cap, 4-12, 4-14
Engine Assy, 5 Brg Vsg-411 (See 1.1L Engine Breakdown), 2-27
Engine Asy Rep.By61498 (See 1.1L Engine Breakdown), 2-27
Engine Gasket Kit, Complete, 5-16, 6-16
Engine Gasket Kit, Upper, 5-16, 6-16
Engine, Vsg-413-89W/Label (See 1.3L Engine Breakdown), 2-27
Extinguisher Kit Fire 355L, 3-44
Extinguisher, Fire, 3-44

F

Fan Assy, Defroster, 3-29
Fan Wldt, Vac w/gaskets, 2-83
Fan Wldt, Vac, Inlet w/gasket, 2-83
Fan Wldt, Vac, Transition, 2-83
Fan, Pusher, 2-38
Fastener, Clip-Louver, 3-27
Filter Assy, Spin-On 10Micron, 2-15
Filter Element Ph, 2-3, 2-15
Filter Pkg, Panel, 94 Pleats, 2-71
Filter, Eng Oil, Spin-On, 2-3, 2-27
Filter, Engine Oil, 5-11, 6-11
Filter, Fuel, 2-3, 2-41, 2-43
Filter, Fuelock, 2-35
Filter, Panel 5.25 X 18.5 X 2, 3-27
Finger Pull, 3-21, 3-23
Fitting, Elbow, 2-33
Fitting, Special, Carb, 2-33
Flange Mounting, 4-13
Flange, Mounting, 4-12, 4-14
Flange,Brg,3 Hole, 2-81
Flap, Tire-Tube ,570/500-8, 3-48
Flap, Tube, 2-53
Flasher, 12V, 3-11, 3-13, 3-15
Flasher, Heavy Duty, 3-3
Fluid, Hyd Oil, Shp 15/40 1Gal, 2-3
Flywheel and Ring Gear Assembly, 5-17, 6-17
Foam, Acoustic, Hopper, 2-71
Foam, Door, Engine, Side, 2-19
Foam, Engine Cover, Bottom, 2-17
Foam, Engine Cover, 2-17
Foam, SBDC, L.H., 3-37, 3-39
Foam, SBDC, R.H., 3-37, 3-39
Frame Wldt, Main, 2-7
Front Plate Assembly, 4-8
Ftg."Y".62 Id Hose - Heater, 3-29
Ftg, Breather, 2-97
Ftg, Grease .25-28Th Strt .63L, 2-65
Ftg, Grease.25-28Th Strt .63L, 2-51
Ftg,Bulkhead .25Npt Wh W21204, 2-45
Ftg,Pipe,Nip.Blk1.25Ptx2.0Lg L, 2-27
Ftg-Brs E90 Em10/Pm06, 2-35
Ftg-Brs E90 EM10/Pm08, 3-29
Ftg-Brs E90 If05/Pm02, 2-41, 2-43
Ftg-Brs E90 Pm08/Sm08, 2-35
Ftg-Brs E90, 2-43
Ftg-Brs Str Bm03/Pm02, 2-35, 2-97
Ftg-Brs Str Em10/Pm06, 3-29
Ftg-Brs Str If05/Pm02, 2-41
Ftg-Brs Str, 2-43
Ftg-E90 Npt/Npt 02Pf-02Pm, 2-43
Ftg-El90 Npt/Npt 02Pf-02Pm, 2-41
Ftg-El90 Npt/Npt 04Pf/04Pm, 2-45
Ftg-El90 Npt/Npt S04Pf-04Pm, 2-35
Ftg-Hyd Brass Npt/Npt 06Pm/06P, 2-35
Ftg-Hyd Cap Jf06, 2-27
Ftg-Hyd E45 Jm04/Jf04, 2-65
Ftg-Hyd E45 Jm04/Om04, 2-75
Ftg-Hyd E45 Jm06/Om06, 2-21
Ftg-Hyd E45 Jm08/Om08, 2-93
Ftg-Hyd E45 Jm12/Om12, 2-15
Ftg-Hyd E45 PM04/PF04, 2-45
Ftg-Hyd E90 Jm12/Jf12, 2-84
Ftg-Hyd E90 Jm08/Om08, 2-84
Ftg-Hyd E90 Jm04/Jf04, 2-95
Ftg-Hyd E90 Jm04/Om04, 2-51, 2-65, 2-73
Ftg-Hyd E90 Jm04/Om06, 2-93
Ftg-Hyd E90 Jm06/Jf06, 2-27, 2-75
Ftg-Hyd E90 Jm06/Om06, 2-51

Ftg-Hyd E90 Jm08/Om08, 2-95, 2-96
Ftg-Hyd E90 Jm08/Om10, 2-91
Ftg-Hyd E90 Jm10/Jf10, 2-93, 2-95
Ftg-Hyd E90 Jm10/Om08, 2-95
Ftg-Hyd E90 Jm10/Om12, 2-96
Ftg-Hyd E90 Jm12/Om12, 2-15
Ftg-Hyd E90 Pm04/Jm06, 2-35
Ftg-Hyd E90 Spcl Pm06/Jm08, 2-33
Ftg-Hyd Plg Jm08, 2-91
Ftg-Hyd Plg Om06, 2-91
Ftg-Hyd Plg Om10, 2-91
Ftg-Hyd Rst Jm04/.047, 2-73
Ftg-Hyd Str Jm04/Jf08, 2-84
Ftg-Hyd Str Jm08/Jf12, 2-84
Ftg-Hyd Str Jm10/Jf12, 2-84
Ftg-Hyd Str Jm06/Jf08, 2-84
Ftg-Hyd Str Jm08/Jf12, 2-84
Ftg-Hyd Str Jm12/Om08, 2-84
Ftg-Hyd Str Jm04/Jf06, 2-96
Ftg-Hyd Str Jm04/Jf08, 2-96
Ftg-Hyd Str Jm04/Om04, 2-65, 2-81
Ftg-Hyd Str Jm04/Om06, 2-93, 2-95
Ftg-Hyd Str Jm04/Om08, 2-95
Ftg-Hyd Str Jm06/Jf10, 2-93, 2-95
Ftg-Hyd Str Jm06/Om06, 2-91
Ftg-Hyd Str Jm06/Om08, 2-81
Ftg-Hyd Str Jm06/Om10, 2-75, 2-96
Ftg-Hyd Str Jm06Om06L, 2-93, 2-95
Ftg-Hyd Str Jm08/Jf12, 2-91
Ftg-Hyd Str Jm08/Om08, 2-81, 2-93
Ftg-Hyd Str Jm08/Om10, 2-96
Ftg-Hyd Str Jm10/Om08, 2-93
Ftg-Hyd Str Jm10/Om10, 2-51
Ftg-Hyd Str Jm10/Om12, 2-96
Ftg-Hyd Str Jm20/Om20, 2-91, 2-96
Ftg-Hyd Str Pm04/Pf02, 2-27, 2-35, 2-41
Ftg-Hyd Tee Jm08Jmjf, 2-84
Ftg-Hyd Tee Jm12Jmjf, 2-84
Ftg-Hyd Tee Jm04Omjm, 2-84
Ftg-Hyd Tee Jm12Jmjmb, 2-84
Ftg-Hyd Tee Jm04Jmbjm, 2-65
Ftg-Hyd Tee Jm04Jmjf, 2-95
Ftg-Hyd Tee Jm06Jmom, 2-93, 2-95
Ftg-Hyd Tee Jm06Omjm, 2-96
Ftg-Hyd Tee Jm08Jfjm, 2-96
Ftg-Hyd Tee Jm10/JfJm, 2-93, 2-95
Ftg-Hyd Tee Jm12Jmom, 2-91
Ftg-Metric Str Omm14/Jm06, 2-27
Ftg-Plug Npt 02Pm Sq Hd, 2-43
Ftg-Str Npt/Npt 04Pf-04Pm, 2-45
Ftg-Str Npt/Npt 06Pf-08Pm, 3-29
Ftg-Tee Npt 04Pm- 04Pf- 04Pf, 2-35, 2-45
Fuelline, .312 Od, 2-41
Fuelline,.375 Od, 2-35
Fuelline, 2-43

G

Gas Cap, Protectoseal, 3-41
Gasket - Thermostat Hsg, 2-27
Gasket, 2.7D 1.5B.12T 5/ 2.1Bc, 2-41
Gasket, Cap, 2-91
Gasket, Carburetor Air Horn, 2-31
Gasket, Carburetor, 2-31, 2-33
Gasket, Cylinder Head, 5-3, 6-3
Gasket, Exhaust Manifold, 5-12, 6-12
Gasket, Front Cover, 5-13, 6-13
Gasket, Fuel Pump 1.1-1.6Liter, 2-27
Gasket, Hyd Tank Breather, 2-91
Gasket, Intake Manifold, 5-12, 6-12
Gasket, Oil Drain Plug, 5-11, 6-11
Gasket, Oil Pump to Block, 5-11, 6-11
Gasket, Rear Retainer, 5-9, 6-9
Gasket, Rocker Arm Cover, 5-3, 6-3
Gasket, Water Pump, 5-14, 6-14
Gasket, 2-3
Gear, Slip Fit, 4-8
Gear, 5-11, 6-11
Geroler, 4-9, 4-11
Geroter & Coupler, 4-5, 4-7
Gerotor and Coupler Assembly, 4-3
Gerotor Set, 4-12, 4-13, 4-14, 4-17
Gerotor, 4-16
Grille, Left, 2-15
Grille, Right, (Gasoline), 2-13

Grille, Right, (LPG), 2-13
Grommet, Rbr, 0.38Id, For .19Matl, 3-37
Grommet, Rbr, 0.69 ID, 3-4, 3-5, 3-6, 3-7, 3-8, 3-9, 3-11, 3-13, 3-15
Grommet, Rbr, For .19Matl 1.06 ID, 2-67
Grommet, Rubber, 3-21
Grommet,Rbr, 0.38 In, 3-25, 3-29
Grommet,Rbr, 0.56 In, 3-8, 3-9, 3-11, 3-13, 3-15
Grommet,Rbr, 0.69 In, 3-27
Grommet,Rbr,0.25Id,For .09Matl, 2-23
Grommet,Rbr,0.56Id,For .13Matl, 3-6, 3-7
Grommet,Rbr,0.62Id,For .06Matl, 2-97
Grommet,Rbr,0.63Id,For .13Matl, 3-4, 3-5
Grommet,Rbr,1.06Id,For .19Matl, 2-69
Grommet,Rbr,1.50Id,For .19Matl, 2-47
Grommet,Rbr,1.62Id,For .13Matl, 2-21
Guard Kit, 355L, 3-17
Guard Wldt, Lights, Revl&Flsh, 3-6, 3-7
Guard Wldt, Ohg, Top, 3-17
Guard, Brush, 2-75
Guard, Fan, W/Label, Gas, 2-47
Guard, Light, 3-37
Guard, String, Brush Motor, 2-75

H

Handle Assy, Latch, Eng Cover, 2-17
Handle, Control Valve, 2-93, 2-95
Handle, Grab, 3-31, 3-33
Handle, Latch, 2-67
Handle, Paddle, 3-23
Handle, Safety Arm, 2-73
Harness, Adapter, B/u Alarm, 3-11, 3-13, 3-15
Harness, Alarm, Backup, 3-11, 3-13, 3-15
Harness, Cab, 3-21
Harness, Engine 355L Gas & LPG, 2-103
Harness, Engine Vsg411/413, 2-103
Harness, Fuel, Gas/Die 355L, 2-103
Harness, Hopper, 2-103
Harness, Horn, 2-103
Harness, Jumper, 2-103, 3-37
Harness, Main, Gas/LPG 355L, 2-103
Harness, Revolv Light, Cab,Ohg, 3-4, 3-5, 3-8, 3-9
Harness, Turn Signal, 3-3
Harness, Wire, Hazard, 3-6, 3-7
Head Assembly, Cylinder, 5-3, 6-3
Headlight Assy,210G, 3-11, 3-13, 3-15
Headlight, 12V.Rect., 2-67, 2-69
Heater Kit 355L, 3-29
Hinge Wldt, Cab Door, 3-23
Hinge Wldt, Door, Engine, 2-19
Hinge Wldt, Engine Cover, Lh, 2-83
Hinge Wldt, Engine Cover, Rh, 2-83
Hinge Wldt, Long Pin, 3-23
Hinge Wldt, Short Pin, 3-23
Hinge, Cover, Hopper, 2-67
Hinge, Coverhopper, 2-69
Hinge, Door, Brush, 2-8, 2-9
Hopper Wldt, 355/385 Ss, 3-49
Hopper Wldt, 2-63
Horn Assy, Back-Up Alarm, 3-11, 3-13, 3-15
Horn, 12V, 2-7
Hose Flex, 4.0Id X 21.5Lg, 2-71
Hose Rbr,0.38 Idx .062D 12.0Lg, 2-27
Hose Vac.,Rubber, .16Id,28.0L, 2-31, 2-35
Hose Vac.,Rubber, .16Id,40.0L, 2-97
Hose, Fuelline, 2-43
Hose, Heater (Cut in 2), 3-29
Hose, Heater, 2-31, 2-35
Hose, Lpg, 4Lpg X 35.0Lg, 2-45
Hose, LPG, Spl, .25 I.D. 55.0L, 2-35
Hose, Molded .38Id X .75Od, 2-31, 2-33
Hose, Molded, Air Intake, 2-37
Hose, Radiator, Upper, 2-47
Hose, Radiator, 2-47
Hose, Rbr, 3-31, 3-33
Hose, Reducer, 3-31, 3-33
Hose, Vacuum .16 Id X 19.0 Lg, 2-35
Hose,.62 Idx60.00 Lng, Heater, 3-29
Hose& Cuff Assy,Vinyl3.0Idx 24, 3-31, 3-33
Hose&2Cuff Assy,Vinyl2.0Id10Ft, 3-35
Hose-Hyd Low04 Jf/J4, 2-87, 2-89
Hose-Hyd Low06 Jf/J4, 2-87, 2-89
Hose-Hyd Low08 Jf/J4, 2-87, 2-89
Hose-Hyd Low08 Jf/Jf, 2-91

Hose-Hyd Low12 Jf/Jf, 2-87, 2-89
Hose-Hyd Med04 Jf/J4, 2-87, 2-89
Hose-Hyd Med04 Jf/J9, 2-87, 2-89
Hose-Hyd Med04 Jf/Jf, 2-87, 2-89
Hose-Hyd Med06 Jf/J4, 2-87, 2-89
Hose-Hyd Med06 Jf/J9, 2-87, 2-89
Hose-Hyd Med06 Jf/Jf, 2-87, 2-89
Hose-Hyd Med08 Jf/J4, 2-87
Hose-Hyd Med08 Jf/J9, 2-87, 2-89
Hose-Hyd Med08 Jf/Jl9, 2-87, 2-89
Hose-Hyd Med10 Jf/J4, 2-87, 2-89
Hose-Hyd Med10 Jf/J9, 2-89
Hose-Hyd Med10 Jf/Jl9, 2-87, 2-89
Hose-Hyd Med12 Jf/J9, 2-87, 2-89
Hose-Hyd Med12 Jf/Jl9, 2-87, 2-89
Hose-Hyd Suc20 Jf/J4, 2-87, 2-89
Hose-Lpg Med08 Spcl S08jf/08j9, 2-35
Housing Cl, 4-13
Housing Wldt, Filter, 3-27
Housing, Bearing, 4-9
Housing, Flywheel, 2-29
Housing, Headlight, 2-67, 2-69
Housing, Sppt, Wheel, 2-51
Housing, Valve, 4-9
Housing, 4-12, 4-14
Hub & Stud Assy, 2-51
Hub Assy, Brush Arm, 2-81
Hub, Brush Adaptor, 1.00B, 2-75
Hub, Pivot, 2-65

I

Idler Gear Assembly, 4-8
Impeller 9.00 Dia., 2-83
Indicator, Oil Level, 5-11, 6-11
Indicator,Service,Air Filter, 2-37
Insert, Exhaust Valve Seat, 5-3, 6-3
Insert, Intake Valve Seat, 5-3, 6-3
Insulation, Acoustic, Engine Cover, 2-17, 2-83
Insulation, Acoustic, Firewall, 2-7
Insulation, Acoustic, Hopper, 2-63
Insulation, Acoustic, Panel, 2-11
Insulation, Acoustic, Plate, 2-11
Insulation, Acoustic, Seat, 2-11
Insulation, Acoustic, 2-24, 3-21
Insulation,S/Foam Door, 3-19
Insulation,S/Foam Rear, 3-19
Insulation,S/Foam,Panel, 3-19
Insulation,S/Foam,Roof, 3-19
Insulation,S/Foam,Side Lh, 3-19
Insulation,S/Foam,Side Rh, 3-19
Isolator Assy, Valve, 2-93, 2-95
Isolator, Vibration .37 Dia, 2-83
Isolator-Vibration .25-20, 2-39
Isolator-Vibration, 125lb. Rating, 2-39
Isolator-Vibration,60 Lb.Ratng, 2-47, 2-83

K

Key Set,Switch Ku, 2-23
Key, Woodruff, 4-12, 5-9, 6-9
Key,Round, 4-8
Key-Wdruff 0.25 1.00 Asa#0808, 4-13
Key, 4-3, 4-5, 4-7, 4-9, 4-11, 4-15
Kit, Detent I&O, 4-19
Kit, Detent Out, 4-19
Kit, Oil Pan Gasket, 5-11, 6-11
Knob, 1.375 Dia, Black, 2-93, 2-95
Knob, Adjusting, 2-77, 2-79
Knob, Black, M8, 3-31, 3-33
Knob, Tapered M8, 2-21
Knob, Tapered, 2-77, 2-79

L

Label Kit, Complete, 355 Line, 2-104
Label Set, Info & Hazard 355, 2-104
Label Set, Operational 355, 2-104
Label Set, Operational 355L, 3-31, 3-33
Label, Numerals 355, 2-104
Label, Operational, Cab, 3-25
Label, Tennant Logo- 10.0 Blue, 2-69
Label, Tennant Logo-10.0 Blue, 2-67
Latch Assy, LPG Tank Mtg,W/Nut, 2-45
Latch, Bolt, 2-8, 2-9, 2-13, 2-15, 2-17
Latch, Cover, 2-67
Latch, Door, 2-67

Latch, Draw, Flexible, 3-50
Latch, Hook, Lh, 2-9, 2-15
Latch, Hook, RH, 2-13
Latch, Hook, Rh, 2-8
Latch/Channel Repl. Kit, 2-13
Latch, 2-17, 2-19, 2-81, 3-23
Lens,Flashing Lite Fr207 Amber, 3-4, 3-6, 3-8
Lens,Flashing Lite Fr207 Blue, 3-4, 3-6, 3-8
Lens,Flashing Lite Fr207 Red, 3-4, 3-6, 3-8
Lens,Rev.Light,Amber, 3-5, 3-7, 3-9
Lens,Rev.Light,Blue, 3-5, 3-7, 3-9
Lens,Rev.Light,Red, 3-5, 3-7, 3-9
Lever Wldt, Baffle, Blowr Wand, 3-31, 3-33
Lever Wldt, M Br, 2-79
Lever Wldt, S Br, 2-77
Lever Wldt, Tilt, 2-21
Lever, Brake, 2-57
Lever, Carburetor, 2-31, 2-33
Lever, Door Release, 3-23
Lever, Governor Actuator, 2-31, 2-33
Light Assy Mark/Yel 12V- . A, 3-3
Light Assy Work/Clr 12V- . A, 3-16
Light Assy, Dome, 3-25
Light Kit Flsh 355L Cab, 3-8
Light Kit Flsh 355L Lrc, 3-6
Light Kit Flsh 355L Ohg, 3-4
Light Kit Revl 355L Cab, 3-9
Light Kit Revl 355L Lrc, 3-7
Light Kit Revl 355L Ohg, 3-5
Light Kit Sgnl 355L, 3-3
Light Kit, Side Brush 355L, 3-16
Light, Flashing, Amber, 12V-Re, 3-4, 3-6, 3-8
Light,Rev.Amber 12V-Reworked, 3-5, 3-7, 3-9
Liner, Cylinder, 5-5, 6-5
Link Assy, Valve Handle, 2-93, 2-95
Lock, Valve Spring, 5-3, 6-3
Long Block, Cylinder, With Crank, Pistons, Rings, etc., 5-5
Louver Assy, 3-27

M

Magnet, Drive Brush, 3-31, 3-33
Main Bearing, Crankshaft, Lower 0.015 OS OD, 0.010 US ID, 5-9, 6-9
Main Bearing, Crankshaft, Lower 0.015 OS OD, 0.020 US ID, 5-9, 6-9
Main Bearing, Crankshaft, Lower 0.015 OS OD, Std ID, 5-9, 6-9
Main Bearing, Crankshaft, Lower Std OD, 0.005 US ID, 5-9, 6-9
Main Bearing, Crankshaft, Lower Std OD, 0.010 US ID, 5-9, 6-9
Main Bearing, Crankshaft, Lower Std OD, 0.020 US ID, 5-9, 6-9
Main Bearing, Crankshaft, Lower Std OD, 0.030 US ID, 5-9, 6-9
Main Bearing, Crankshaft, Lower Std OD, Std ID, 5-9, 6-9
Main Bearing, Crankshaft, Upper 0.015 OS OD, 0.010 US ID, 5-9, 6-9
Main Bearing, Crankshaft, Upper 0.015 OS OD, 0.020 US ID, 5-9, 6-9
Main Bearing, Crankshaft, Upper 0.015 OS OD, Std ID, 5-9
Main Bearing, Crankshaft, Upper 0.015OS OD, Std ID, 6-9
Main Bearing, Crankshaft, Upper Std OD, 0.005 US ID, 5-9, 6-9
Main Bearing, Crankshaft, Upper Std OD, 0.010 US ID, 5-9, 6-9
Main Bearing, Crankshaft, Upper Std OD, 0.020 US ID, 5-9
Main Bearing, Crankshaft, Upper Std OD, 0.030 US ID, 5-9, 6-9
Main Bearing, Crankshaft, Upper Std OD, Std ID, 5-9, 6-9
Main Bearing, Crankshaft, UpperStd OD, 0.020 US ID, 6-9
Maint Kit, Seals 355L, 2-3
Maint Kit, Skirts 355L, 2-3
Maint,Kit, Shaker Filter, 355L, 2-3
Manifld Insert, 5-12, 6-12
Manifold, Exhaust, 2-27
Manifold, Intake, 5-12, 6-12
Manual Op/Mt 355 French, 3-52
Manual Op/Mt 355 Japanese, 3-52
Manual Op/Mt 355 Spanish, 3-52
Manual Pkg 355, 3-52

Manual Service 355/385, 3-52
Manual-Fiche Pkg 355G, 3-52
Molding, Trim 11-14Ga 7.50, 2-69
Molding, Trim 11-14Ga 14.20, 2-11
Molding, Trim 11-14Ga 22.80, 2-11
Molding, Trim 11-14Ga 25.62, 2-7
Molding, Trim 11-14Ga 10.00, 2-21
Molding, Trim 11-14Ga 5.75, 2-21
Motor Assy, Heater W/Fan, 3-29
Motor, Ele Shaker 12V, 2-71
Motor, Hyd Gear In 02.8 B 1500, 4-13
Motor, Hydraulic (Repl by 02641), 4-9
Motor, Hydraulic, 4-11, 4-12, 4-14, 4-15
Motor-Ele 12V, Wiper, Windshld, 3-25
Motor-Hyd Gear (See Breakdowns), 2-51, 2-75, 2-81, 2-84
Muffler, Exhaust, 2-39
Muffler, Spark Arresting, 3-42

N

Nut Hx Stover M 8X1.25, 2-27
Nut Speed, Retainer, 8-32 Thd, 3-11, 3-13, 3-15
Nut, Adjustable, LPG Tank Mtg, 2-45
Nut, Hx Stover M8 x 1.25, 5-12, 6-12
Nut, Retainer R/.312 Dia, 2-73
Nut, slotted Hex, 4-12
Nut, U M 6X1.0 Pltd, 2-17
Nut, U M 6X1.0 Pltd, 2-23
Nut, U M 8X1.25 Pltd, 2-11
Nut, U M6 X 1,0, 3-25
Nut, Wing .44-20 Special, 2-37
Nut, Wing, Air Horn, 2-31
Nut, Wing, 2-49
Nut-Hx Jam M20x1.5 4 Pltd, 2-21
Nut-Hxlocnyln M 6X1.0 Reg Ss, 2-3
Nut-Hxlocnyln M 8X1.25 Reg Ss, 2-3
Nut-Hxslot 1.00-20 Pltd, 2-55
Nut-Hxslot 1.12-18 Pltd, 2-51
Nut-Hxslot .75-16 Pltd, 4-13
Nut-Wheel .50-20 60 Angle, 2-51
Nut, 4-9, 4-11

O

O-Ring Gland, 2-96
Oil Pan and Plug, 5-11, 6-11
Output Shaft, 4-12, 4-14

P

Pad, Neoprene .06 X .7 X 2.7, 3-21, 3-23
Pad, Rubber, 2-57, 3-31, 3-33
Pad, Tank, Hyd, 2-91
Pad, Tread, 2-11, 2-59
Pad, 2-57
Pan Gasket Kit, 6-16
Pane, Acrylc, Door,Sliding (Repl. By 74428), 3-23
Pane, Acrylc, Door,Stationry (Repl. By 74428), 3-23
Pane, Glass, Left ,Stationry (Repl. By 74429), 3-21
Pane, Glass, Left, Sliding (Repl. By 74429), 3-21
Panel Assy, Instr, 2-23
Panel Assy, Instrument w/label, 2-24
Panel Wldt (Rep. By 84586), 2-45
Panel Wldt, Sppt, Seat, 2-11
Panel Wldt, 2-45
Panel, Engine (Replaced By 72152), 2-7
Panel, Engine, 2-7
Panel, Filler, Upper, 2-11
Panel, Inside, 2-11
Panel, Mtg, Pressurizer, 3-27
Panel, Perma-Filter, 2-63
Panel, Support, 2-77
Panel, Switch, Cab, 3-25
Pcv Breather Fd, 2-27
Pedal, Propel w/pad, 2-59
Performance Pkg 400Hr Gas 355L, 2-3
Performance Pkg 400Hr LPG 355L, 2-3
Pin Assy, Clevis, Hopper Lift, 2-73
Pin Assy, Keeper, 3-23
Pin Assy, Side Brush W/Clip, 2-75
Pin Clevis .375 Dia X 1.13 Lg, 2-55, 2-57, 2-79
Pin, Arm, Safety, 2-73
Pin, Clevis .75 Dia X 5.5 Lg, 2-75
Pin, Cotter, 2.3 mm, 5-7, 6-7
Pin, Dowel Ce, 4-5, 4-7
Pin, Drive Gear, 5-11, 6-11

Pin, Grooved, 2-73
Pin, Hair Cotter, 3-37, 3-39
Pin, Lh, 2-73
Pin, Pivot, Lower, 2-13, 2-15
Pin, Pivot, Upper, 2-13, 2-15
Pin, Rh, 2-73
Pin, Spring, 4-16
Pin, Wheel Support, Rear, 2-51
Pin,Clevis,0.25 Dia.X 2.44 Lg, 2-21
Pin,Clevis,0.37 Dia.X 1.00 Lg, 2-55
Pin,Clevis,0.37 Dia.X 1.50 Lg, 2-77
Pin,Clevis,0.37 Dia.X 2.00 Lg, 2-77
Pin,Clevis,0.37 Dia.X 2.12 Lg, 2-59
Pin,Clevis,0.37 Dia.X 3.00 Lg, 2-21
Pin,Clevis,0.50 Dia.X 1.25 Lg, 2-65
Pin,Clevis,0.50 Dia.X 2.00 Lg, 2-65
Pin,Clevis,0.50 Dia.X 2.25 Lg, 2-65
Pin,Clevis,0.50 Dia.X 3.75 Lg, 2-59
Pin,Clevis,0.50 Dia.X 5.00 Lg, 2-75, 3-37, 3-39
Pin,Clevis,0.50 Dia.X 5.50 Lg, 2-75
Pin,Hair Cotter #Lhcot-2,Leitk, 2-11, 2-65
Pin,Roll,.09Odx0.75L,.094/.097, 3-31, 3-33
Pin,Roll,.18Odx1.25L,.187/.192, 2-65
Pin,Roll,.38Odx2.00L,.375/.382, 2-65, 2-81
Pin-Grvd,1.00D 3.0L2/ 2.71Btwn, 2-73
Pin, 4-9, 4-11, 4-17, 5-7, 6-7
Piston, Pin and Ring Assembly, 0.020 OS, 5-9
Piston, Pin and Ring Assembly, 0.040 OS, 5-9
Piston, Pin and Ring Assembly, Std, 5-9, 6-9
Piston, Pin and Ring Assembly,, 6-9
Pivot Assy, S Br, 2-75
Plate - Hose Support, 2-51
Plate Wldt, Blower Wand, 3-31, 3-33
Plate Wldt, Cover, Bottom, 2-17
Plate Wldt, Governor, 2-21
Plate Wldt, Sprngbrkt Backing, 2-69
Plate Wldt, Strike, 2-67
Plate, Backing, Handle, 3-31, 3-33
Plate, Backing, 2-67
Plate, Cam, 4-3
Plate, Circuit Breaker, 2-25
Plate, Cover, 3-21
Plate, Deflector, Eng Cover, 2-17
Plate, Deflector, Engine Cover, 2-17
Plate, Filler, 2-47
Plate, Floor w/tread, 2-11
Plate, Latch, 2-67
Plate, Lift Arm, 2-63
Plate, Light Mtg., 3-4, 3-5
Plate, Mtg, Latch, 2-81
Plate, Mtg, Main Brush Shaft, 2-81
Plate, Mtg, Wiper Kit, 3-25
Plate, Reinforcement-Ignition, 2-23
Plate, Retainer, Cover, Sbdc, 3-37, 3-39
Plate, Retainer, Front, Lh, 2-3, 2-63
Plate, Retainer, Front, Sbdc, 3-37, 3-39
Plate, Retainer, Front,Lh,Sbdc, 3-37, 3-39
Plate, Retainer, Lh, 2-3, 2-63
Plate, Retainer, Sbdc, Rh, 3-37, 3-39
Plate, Retainer, Wheel Pocket, 3-37, 3-39
Plate, Seal, Sppt, Seat, 3-21
Plate, Seal, 2-81
Plate, Spacer, Magnet, 3-31, 3-33
Plate, Sppt, Shroud, 2-47
Plate, Thrust, 5-7, 6-7
Plate, Tray, Filter, 2-71
Plate, Valve Ce, 4-5, 4-7
Plate, Wear, 4-17
Plate-Cover, 2-25, 3-25
Plate, 2-63, 2-71, 4-9
Plug & O-Ring, 4-19
Plug Assembly Ph, 4-13
Plug Assembly, 4-3, 4-5, 4-7, 4-19
Plug Weld, Brush Drive, Sweep, 2-81
Plug Wldt, Idler, 2-81
Plug, #6 O-Ring, 4-19
Plug, #8 O-Ring, 4-19
Plug, 1/4 NPT, 5-5, 6-5
Plug, Ball, Oil Gallery, 5-5, 6-5
Plug, Drain, 3-35
Plug, Oil Drain, 5-11, 6-11
Plug, Plastic 1.00 D, 2-21
Plug, Plastic, 1.00 D, 2-24, 3-21
Plug, Rocker Arm Shaft, 11 mm, 5-7, 6-7

Plug, Thread 1/2–13, 2-81
Plug, Tube, 2-81
Plug, 4-16, 5-3, 5-5, 5-11, 5-12, 6-3, 6-5, 6-11, 6-12
Plugbtn .38H .03–.12 Blacknyl (LPG only), 2-24
Plugbtn .62H .03–.12 Blacknyl, 2-25, 3-25
Plugbtn .38H .03–.12 Blacknyl, 2-7
Plugbtn .38h .03–.12 Blacknyl, 2-24
Plugbtn .62H .03–.12 Blacknyl, 2-7
Plunger, 4-19, 5-11, 6-11
Poppet, 4-16, 4-19
Pressurizer Kit Cab 355, 3-27
Pulley Assy – Cable, 1.5 Dia, 2-55, 2-57, 2-77, 2-79
Pulley, Crankshaft, 1 Groove, 5-9, 6-9
Pump Adaptor Assembly, 4-3
Pump Adaptor Assy, 4-5, 4-7
Pump Driveshaft, 4-5, 4-7
Pump Housing Asy Ce, 4-5, 4-7
Pump, Fuel, Ele, 2-41
Pump, Fuel, 2-43
Pump, Gear, 4-8
Pump, Hyd Piston V 1.24 R 2750 (Repl. by 70179), 4-5
Pump, Hyd Piston V 1.24 R 2750, 4-7
Pump, Hydraulic (Repl. by 70133), 4-3
Pump, Oil, 5-11, 6-11
Pump–Hyd Gear (See Breakdowns), 2-96
Pump–Hyd Piston (See Breakdowns) (Repl. by 70133), 2-96
Pump–Hyd Piston (See Breakdowns) (Repl. by 70179), 2-96
Pump–Hyd Piston (See Breakdowns), 2-96

R

Race Thrust, 4-13
Race, Bearing, 4-7, 4-16, 4-17
Race, Inner Bearing, 4-5, 4-7
Race, Thrust, 4-12, 4-14
Radiator, 2-47
Rail, Seat, Rh, 2-11
Rectifier Assy Md, 2-38
Regulator Assy Md, 2-38
Relay, Shrouded, 12 Vdc, 2-25
Relief Assembly, 4-20
Repair Info. Cl, 4-13
Repair Info., 4-14, 4-15
Repair Info, Valve, 4-19
Repair Info, 4-5, 4-7, 4-17
Repair Kit, Fuelock, 2-35
Repl Kit, Plate, Bottom F/59843, 2-17
Repl Kit, Sun Shield, 2-23
Repl. Kit, Backup Switch, 3-11, 3-13, 3-15
Replm Kit, Case, 2-23
Replm Kit, Cir Board, 2-23
Replm Kit, Fan Motor F/55216, 3-29
Replm Kit, Fuel Pump F/59945, 2-43
Replm Kit, Hourmeter, 2-23
Replm Kit, Housing, 2-29
Replm Kit, Hpr Cvr Sprng Brkt, 2-69
Replm Kit, Instr Panel, 2-23
Replm Kit, Lamp, Backlighting (8), 2-23
Replm Kit, Lamp, Fault (8), 2-23
Replm Kit, Muff Hanger F/82545, 2-39
Replm Kit, S Br Pivot, 2-77
Replm Kit, Seal, 2-23
Replm Kit, Starter, 2-29
Replm Kit, Touch Panel, 2-23
Reservoir, 07.0 Gal W/label, 2-91
Retainer Assembly, Rear, 5-9, 6-9
Retainer, Front, 4-16, 4-17
Retainer, 3-25, 5-3, 5-7, 6-3, 6-7
Retaining Ring–External, 1.25D, 2-73
Retaining Ring, 4-7
Retaining Rng, 4-19
Return Spring–Brakes, 2-55
Rim Assembly, 2-53
Rim Assy, 4.25” Bead x .188 Stl, 3-48
Ring Set, Piston, 0.020 OS, 5-9, 6-9
Ring Set, Piston, 0.040 OS, 5-9, 6-9
Ring Set, Piston, Std, 5-9, 6-9
Ring, Gear, 5-17, 6-17
Ring, Locating, Starter, 2-29
Ring, Retaining, Ext, .75 Dia, 2-73
Ring, Retaining, Ext, 1.25 Dia, 2-73
Ring, Retaining, Intl, 2.00Dia, 2-73
Ring, Retaining, 4-16, 4-17

Ring,Retain,Ex,0.50Od,Selflock, 2-65
Ring,Retain,Ex,0.98Od,E-Ring, 2-73
Ring-Retain, Ex, 0.98OD, E-Ring, 2-57
Ring, 2-93, 2-95
Rivet, Plastic .181D x .720, 2-69
Rivet, Plastic .250x.898, 2-7, 2-8, 2-9, 3-51
Rivet, Plastic .325D x .787, 2-69
Rivet, Pop- .125Dx.38x.25Dhd Al, 3-21, 3-23
Rod Assembly, Connecting, 5-9, 6-9
Rod Weldt, Drive Linkage, 2-59
Rod Wldt, Drive Linkage, 2-59
Rod Wldt, Pivot, 2-63
Rod Wldt, Seat, 2-11
Rod Wldt, 2-65
Rod, Adjusting, 2-59, 2-61
Rod, Brake, 2-55
Rod, Control, Throttle, 2-31, 2-33
Rod, Latch, Engine Cover, 2-17
Rod, Speed Limiter, Adjusting, Rh, 2-59
Rod, Spring, 2-21
Rod, Valve Push, 5-7, 6-7
Rod-End M10X1.5 W/Stud, 2-61
Rod-End M10X1.5 W/Stud, 2-59
Roller Bearing, 4-5, 4-7
Rotating Kit, 4-3, 4-5, 4-7
Rotor and Shaft, 5-11, 6-11

S

Scr Hex .31-18X3.25, 4-5, 4-7
Scr Hex M10X1.5 100, 3-31, 3-33
Scr Hexssm 6X1.0 25, 2-3
Scr Hexssm 8X1.25 25, 2-3
Scr Pan 06-32X0.38, 4-5
Scr Soc M 6X1.0 20, 2-31, 2-33
Scr Soc M 8X1.25 25, 2-73
Scr Soc M10X1.5 40, 2-51
Scr,.31-18X3.75G5Ce, 4-5
Scr-Hex .38-16x2.00 Full Thd, 2-15
Scr-Hex .38-16x2.50 Full Thd, 2-13
Scr-Hex M12x1.75 40 10.9Pltd, 2-15
Scr-Hxfmgm 6X1.0 20 Pltd, 2-3
Scr-Shld .250Dx1.25L 10-24, 3-23
Scr-Shld .312Dx1.00L .25-20, 2-59
Scr-Shld .375Dx0.38L .31-18, 3-23
Scr-Shld .500Dx1.25L .38-16, 2-61
Scr-Soc M 6X1.0 35 Nylonloc, 2-38
Screen, Spark-Arresting, 2-39
Screw, Cap, 4-7, 4-14
Screw, M4 x 10, 5-15, 6-15
Screw, M6 x 14, 5-5, 6-5
Screw, M8 x 14, 5-15, 6-15
Screw, Rocker Cover to Head, 5-3, 6-3
Screw,Cap, 4-12
Screw, 4-12, 4-14, 5-7, 6-7
Screws, 4-7
Seal Kit, 4-12, 4-14
Seal Foam Rbr .38 .62W 4.4L, 3-27
Seal Foam Rbr .38 .62W 18.6L, 3-27
Seal Kit, Motor, 4-15
Seal Kit, One Cartridge, 4-15
Seal Kit, Pump Ce, 4-5, 4-7
Seal Kit, Vlv, 4-19
Seal Kit, 4-3, 4-8, 4-9, 4-11, 4-16, 4-17, 4-20, 4-21, 4-22
Seal Replmt Kit, 4-13
Seal, 142.0 Lg Door, 3-21
Seal, 19.75 Lg, 3-21
Seal, Acoustic, Engine Cover, 2-83
Seal, Bulb 140.0 Lg, 2-3, 2-71
Seal, Bulb 50.0Lg, 2-69
Seal, Cab Door, 3-23
Seal, Cab, Front, 3-21
Seal, Cab, Side, 3-21
Seal, Cover Plate, 5-11, 6-11
Seal, Crankshaft Rear, 5-9, 6-9
Seal, Door, Brush, Lh, 2-9
Seal, Door, Brush, Rh, 2-8
Seal, Door, Dump, Side, 2-3, 2-63
Seal, Door, Dump, 2-3, 2-63
Seal, Door, Hopper, 2-63
Seal, Fan, Vac, Inlet, 2-83
Seal, Fan, Vac, Motor, 2-83
Seal, Fan, Vac, Outlet, 2-83
Seal, Fan, Vac, Transition, 2-83
Seal, Foam Rbr .31X.38X, 3-29

Seal, Foam Rbr, 2-8, 2-9
Seal, Foam Rubber, 2-63
Seal, Foam, Door, 3-51
Seal, Front Cover, 5-9, 5-13, 6-9, 6-13
Seal, Heater Air, 3-29
Seal, Oring .103 x .612Id, 2-95
Seal, Pressurizer, 3-27
Seal, Rbr, .25 X 1.50 X 9.0, 2-67
Seal, Rbr, .25 X 1.50 X 17.5, 2-67
Seal, Rbr, .31 x .75 x 7.0, 2-8, 2-9
Seal, Rubber, 2-19, 2-24
Seal, Side Brush Lift, 3-27
Seal, Tube, Dust, 2-71
Seal, Vac Wand, 2-63
Seal, Valve Stem, 5-3, 6-3
Seat Belt Kit 355L, 3-40
Seat, Ball, 4-16
Seat, 2-11
Send Unit, 2-41, 2-43
Sender-Temperature, Water, 2-27
Sensor, Water Temperature, 5-12, 6-12
Separator, Ignition Wire, 5-15, 6-15
Service Manual Vsg Fd, 3-52
Shaft and Bearing Kit, 4-9, 4-11
Shaft Assembly, Rocker Arm, 5-7, 6-7
Shaft Wldt, Brake w/pad, 2-57
Shaft Wldt, Brush, 2-81
Shaft, Baffle, 3-31, 3-33
Shaft, Idler, 2-81
Shaft, Output, 4-13
Shaft, Pump, 4-3
Sheave, Water Pump, 1Gr 4.25Od, 2-38
Shield Assy, Exhaust, 2-27
Shield, Drip, 2-31
Shim .010 Thk, 4-19
Shim .015 Thk, 4-19
Shim .035 Thk, 4-19
Shock Absorber, 2-59
Short Block, Cylinder, 5-5
Signal Assy Rework, E1740 Turn, 3-3
Skirt Assy, Brush Door, Lh, 2-9
Skirt Assy, Brush Door, Rh, 2-8
Skirt, Brush Door, Inner, 3-51
Skirt, Brush Door, Outer, 3-51
Skirt, Bumper Stop, 2-67
Skirt, Cover, Sbdc, 3-37, 3-39
Skirt, Deflection, Vac Kit, 3-51
Skirt, Deflector, 2-8, 2-9
Skirt, Front, Sbdc, 3-37, 3-39
Skirt, Hopper, Top, 2-7, 3-51
Skirt, Lip, 2-3, 2-63
Skirt, Recirculation, Turf (Option), 2-7
Skirt, Sbdc, Rh, 3-37, 3-39
Skirt, Seal, M Br, 2-7
Skirt, Side, Sbdc, Lh, 2-3, 2-63
Skirt, Wheel Pocket, Sbdc, 3-37, 3-39
Skirt,Bumperstop, 2-69
Sleeve, .259B .38D .62 Dom, 2-93, 2-95
Sleeve, .260B .50D .75, 2-95
Sleeve, .344B .50D .81 Cr.Anc, 2-57
Sleeve, .391B 1.38D .19 Hr.Znc, 2-59
Sleeve, Bearing, 2-61
Sleeve, Door Stop, 3-23
Sleeve,1.12B 1.38D1.00 Rubber, 2-3, 2-71
Sleeve,1.12B 1.62D1.50 Rubber, 2-3, 2-71
Sleeve-Nyln #20 20.0L, 2-65
Sleeve-Nyln #20 65.0L, 2-75
Sleeve-Nyln #24 30.0L, 2-15
Sleeve-Nyln #24 35.0L, 2-81
Sleeve-Nyln #38 30.0L, 2-21
Slinger, Oil, 5-9, 6-9
Spacer Plate Cl, 4-13
Spacer Plate, 4-12, 4-14, 4-16
Spacer, Fan .88, 2-38
Spacer, Pivot Block (Repl. By 72179), 2-15
Spacer, Pivot Block (Replaced By 72179), 2-13
Spacer, Pulley, 2-55, 2-57, 2-77, 2-79
Spacer, 2-47, 4-16, 4-17, 4-19
Spark Plug, 2-3, 5-15, 6-15
Spindle, Adjustment, 2-19
Spring Assy, Recirculation, 2-7
Spring Kit, Hopper Cover, 2-67
Spring Kit, Spool #3, 4-20
Spring Kit, 4-17

Spring, Compression,24Diax1.75, 2-31
Spring, Locating, 5-7, 6-7
Spring, Tension, 2-63, 2-69
Spring, Torsion, 2-21, 2-57
Spring, Valve, 5-3, 6-3
Spring,Shaker, 2-71
Spring,Tens, .50Dx.05Wire 2.5L, 2-93, 2-95
Spring-Gas 120Lb 7.1 Stroke, 2-69
Spring-Gas Assy, Eng Cover, 2-17
Spring, 4-7, 4-9, 4-11, 4-16, 4-19, 5-11, 6-11
Sprng, Tens, 0.50 Odx.05 Wire 2.5L, 2-13, 2-15
Sprng,Comp,0.62Idxfl.Wire 3.0L, 2-59
Sprng,Comp,0.74Idx.11Wire 5.5L, 2-21
Sprng,Tens,0.50Odx.05Wire 1.0L, 2-17
Sprng,Tens,0.75Odx.12Wire 3.4L, 2-61
Sprng,Tens,1.12Odx.14Wire 6.3L, 2-75
Sprocket, Camshaft, 5-7, 6-7
Sprocket, 5-9, 6-9
Src-Hex M12x1.75 40 10.9Pltd, 2-13
Starter, Ford 1.8 Hp, 2-29
Steer Control, Hyd (See Breakdowns) (Repl. by 74172), 2-21
Steer Control, Hyd (See Breakdowns), 2-21
Strainer-Hyd Suction 25-100-03, 2-91
Strap, Backing, Hopper, 2-7
Strap, Deflector, Lh (Not Shown), 3-51
Strap, Deflector, Rh, 3-51
Strap, Deflector, 2-8, 2-9
Strap, Door, Dump, Side, 2-3, 2-63
Strap, Door, Dump, 2-3, 2-63
Strap, Hinge - Lp Tank Mtg, 2-45
Strap, Main Lip, 2-3, 2-63
Strap, Motor, Shaker, 2-71
Strap, Mtg.- Lp Tank, 2-45
Strap, Tank Retainer - Lp, 2-45
Strap, Tank, Gas, 2-41, 2-43
Strap,Rubber Tie-Down, 2-48
Strap, 2-8, 2-9, 2-63, 3-51
Strip, Mtg, Gusset, 2-67, 2-69
Strip, Mtg, Hinge, 2-67, 2-69
Strip, Retainer, Bearing, 2-81
Strip, Retainer, Seal, 2-7
Strip, Retainer, Skirt, 2-8, 2-9
Strip, Retainer, 2-8, 2-9, 3-51
Strip,Rbr.25X.50S&M #6422,55.0, 3-23
Strip,Rbr.25X.50S&M, 3-21
Stud, Ball, Gas Spring, 2-69
Stud, Ball, 2-17
Stud, Carb, Air Horn, 2-31
Stud, M8X1.25 20 8.8 Pltd, 2-31, 2-33
Stud, Wheel .50-20 x 1.50, 2-51
Stud, 5-12, 6-12
Support, Rocker Arm Shaft, 5-7, 6-7
Switch Assy, Roller, 2-65, 3-3, 3-11, 3-13, 3-15
Switch Ignition, 2-23
Switch, Pressure, LPG, 2-35
Switch, Pressure, Oil, 2-27
Switch, Pressure, 2-97
Switch, Pushmom, Spst100A 12V, 2-24
Switch, Rocker Dpdt, 3-25, 3-27
Switch, Rocker Spst, 3-25, 3-29
Switch, Waterproof, 10A, 3-11, 3-13, 3-15

T

Taillight Assy, 2-7
Tank Repl. Kit, Fuel, 9.4 Gal, 2-41
Tank Wldt Repl. By 72136, 2-91
Tank, Fuel, 9.4 Gal, 2-43
Tank-Lp,33#,Liq,Both,Fill Ga L, 2-45
Tappet, Std, 5-7, 6-7
Tensioner, 5-7, 6-7
Thermostat Assembly, 140 Deg, 2-71
Thermostat, 5-14, 6-14
Thrust Bearing, 4-13
Thrustbearing Kit, 4-5
Tie, Cable 1.75D Max 7.50Lg, 2-48, 2-49, 2-97, 3-3, 3-4, 3-5, 3-6, 3-7, 3-8, 3-9, 3-11, 3-13, 3-15
Tie, Cable 3.00D Max 11.41Lg, 2-21
Tip, Rubber, 2-13, 2-15
Tire & Rim Assy, 5.70/5.00R-8, 2-53
Tire and Wheel Assembly (Repl. By 70287), 2-53
Tire and Whl. Assy, Soft Ride Solid, 3-46, 3-47
Tire, Hi-Wear 5.70/5.00R-8, 3-48
Tire, Solid, Black, 3-47
Tire, Solid, Tan, Non-Marking, 3-46

Tire, Tube and Flap Assembly, 2-53
Tire,18X5X12.12 Solid, 2-55
Tire&Rim Assy, Hi-Wear 5.00R-8, 3-48
Transducer, 5-5, 6-5
Tray, Battery, LPG, 2-49
Tray, Filter Carrier, 2-71
Tray, Gas, 2-41, 2-43
Tube - Carb. Air Intake, 2-37
Tube Assembly, Oil Pickup, 5-11, 6-11
Tube Wldt, Leg, Ohg,Rh,Painted, 3-17
Tube Wldt, Leg,Ohg,Lh,Painted, 3-17
Tube Wldt, Sppt, Blower Wand, 3-31, 3-33
Tube, Exhaust, 2-39
Tube, Inlet, A Clnr, 2-37
Tube, Inner -5.00R-8, Js2 Valve, 2-53
Tube, Inner 5.00R-8, Js2 Valve, 3-48
Tube, Oil Level Indicator, 5-11, 6-11
Tube, Plastic, 3.0 Od X 4.0Lg, 3-31, 3-33
Tube, Plastic, 3.0 Od X 16.0Lg, 3-31, 3-33
Tube, Plastic, 3.0 Od X 48.0Lg, 3-31, 3-33
Tube, Tire (Repl. By 70280), 2-53
Tube,Spacer,.41Dx.32Bx1.Ol, 2-63

U

U - Bolt, 2-21

V

Vacuumized Skirt Kit, Main Bru, 3-51
Valve Assembly, Solenoid, 4-15
Valve Drive, 4-9, 4-11
Valve Kit, Tow, 4-5
Valve Plate, 4-9, 4-11
Valve, Charge Relief, 4-3
Valve, Dump, 4-7
Valve, Exhaust, Std, 5-3, 6-3
Valve, Hyd Cntrl Man, 4-19
Valve, Hydraulic (Repl by 48761), 4-20
Valve, Hydraulic Steering (Repl by 74172), 4-16
Valve, Hydraulic Steering, 4-17
Valve, Intake, Std, 5-3, 6-3
Valve, Press Relief, LPG Rego, 2-45
Valve, Relief, 4-3
Valve-3 Way, 3-29
Valve-Hyd,Manual (Repl. By 48761) (See Breakdowns), 2-93
Valve-Hyd,Manual (See Breakdowns), 2-95
Valve-Relief 2750 PSI, 4-7
Valve-Relief, 4-5
Valve, 4-9, 4-11
Vaporizer Repair Kit Im, 2-35
Vaporizer, LPG, 2-35

W

Wand Kit, Vac, 3-35
Wand Weldment, 3-35
Washer Ce, 4-5, 4-7
Washer Flt .25 Ss, 2-3
Washer Flt .31 Ss, 2-3
Washer, .188B .375D .030Nylon, 2-91
Washer, .195B 1.00D .10 Rbr, 2-31
Washer, .281B .62D .06 Nylon, 2-31
Washer, .405B .81D .06Nylon, 2-77, 2-79
Washer, .530B 1.50D .19HR, 3-39
Washer, .531B 1.75D .12Cr.Znc, 2-81
Washer, 1.255B 1.75Od .12Hrs, 2-73
Washer, 1.281B 1.75Od .25Hrznc, 2-73
Washer, 1.281B 1.75Od .31Hrznc, 2-73
Washer, 1/4 Lock, 5-7, 5-11, 6-7, 6-11
Washer, B10 x 20 x 2.5, 5-7, 6-7
Washer, B8 Lock, 5-9, 5-11, 5-14, 6-9, 6-11, 6-14
Washer, Flat, 6 mm, 5-3, 6-3
Washer, Flat, 2-29, 5-7, 6-7
Washer, Lock, M6, Front Cover and W/P to Block, 5-13, 6-13
Washer, M6 Lock, 5-14, 6-14
Washer, Main Bearing Thrust, 0.015 OS, 5-9, 6-9
Washer, Main Bearing Thrust, Std, 5-9, 6-9
Washer, Pulley to Crankshaft, B12, 5-9, 6-9
Washer, Spring, 5-7, 6-7
Washer, Thrust, 2-51
Washer,1.281B 1.75D .O8Cr Znc, 2-73
Washer-Belleville .50 Pltd, 2-13, 2-15
Washer-Flt .31 Fender Pltd, 2-93, 2-95
Washer-Flt .31 Fender Pltd, 2-39
Washer-Wavy Spring,#Ww-381-&-8, 2-61
Washer, 4-8, 4-12, 4-19
Water Pump, 5-14, 6-14
Weather Strip, L.H., 3-21
Weatherstrip,Rubber, 3-23
Weight, Eccentric, 2-71
Well-Nut .25-20 #1/4-5, 3-25
Well-Nut .31-18, 3-27
Wheel Assy, 2-55
Wheel, Steering, 14 Dia X 36T, 2-21
Window, Cab, Door, 3-23
Window, Cab, Front, 3-21
Window, Cab, Rear, 3-21
Window, Cab, Side, 3-21
Wingnut, 3-43
Wire Ass'Y-Elect.,Ground, 2-29
Wire Assy, 42.0 Lg, 2 Ga, Neg, 2-48
Wire Assy, 60.0 Lg, 2 Ga, Neg, 2-49
Wire Assy, 66.0 Lg, 2 Ga, Pos, 2-48
Wire Assy, 78.0 Lg, 2 Ga, Pos, 2-49
Wire Assy, Horn Ground, 16 Ga x 6, 2-7
Wire, Spark Plug, No. 1, 5-15, 6-15
Wire, Spark Plug, No. 2, 5-15, 6-15
Wire, Spark Plug, No. 3, 5-15, 6-15
Wire, Spark Plug, No. 4, 5-15, 6-15
Wire-Ground, Alternator, 2-38

Y

Yoke, Pivot, Machining, 2-65
Yoke,End-Adjustable, 2-77, 2-79

We Need Your Help...

As part of Tennant's Zero Defects Program, we want to know about errors you have found or suggestions you may have regarding our machine manuals. If you find an error or have a suggestion, please complete this postage-paid form and mail it to us. Thank you for helping us make zero defects a way of life at Tennant.

Manual No. _____ Rev. No._____ Publish Date _____ Page _____

Machine _____ ❑ Report Error ❑ Suggestion

_____

_____

_____

_____

_____

_____

_____

_____

_____

_____

_____

_____

_____

Name _____ Date _____

Customer Number _____

Company _____

Address _____

City/State/Zip Code _____

Fold along dotted lines

Tape here

NO POSTAGE
NECESSARY
IF MAILED
IN THE
UNITED SATES

BUSINESS REPLY MAIL

FIRST CLASS MAIL PERMIT NO. 94 MINNEAPOLIS, MN

POSTAGE WILL BE PAID BY ADDRESSEE

TENNANT COMPANY
Technical Publications #15
701 North Lilac Drive
P.O. Box 1452
Minneapolis, MN 55440-9947

We Need Your Help...

As part of Tennant's Zero Defects Program, we want to know about errors you have found or suggestions you may have regarding our machine manuals. If you find an error or have a suggestion, please complete this postage-paid form and mail it to us. Thank you for helping us make zero defects a way of life at Tennant.

Manual No. _____ Rev. No._____ Publish Date _____ Page _____

Machine _____ ❑ Report Error ❑ Suggestion

_____

_____

_____

_____

_____

_____

_____

_____

_____

_____

_____

_____

_____

Name _____ Date _____

Customer Number _____

Company _____

Address _____

City/State/Zip Code _____

Fold along dotted lines

Tape here

NO POSTAGE
NECESSARY
IF MAILED
IN THE
UNITED SATES

BUSINESS REPLY MAIL

FIRST CLASS MAIL PERMIT NO. 94 MINNEAPOLIS, MN

POSTAGE WILL BE PAID BY ADDRESSEE

TENNANT COMPANY
Technical Publications #15
701 North Lilac Drive
P.O. Box 1452
Minneapolis, MN 55440-9947